ELECTRICAL TIMEKEEPING

In remembrance of your
interesting lecture
Albert Einstein
1935.

THE AUTHOR WITH PROFESSOR EINSTEIN

The autograph message is reproduced from the back of the original photograph.

ELECTRICAL TIMEKEEPING

by

F. HOPE-JONES, M.I.E.E., F.R.A.S.

Fellow, Past-Chairman and Vice-President of the British Horological Institute; Honorary Member of the Horological Institute of America and Horological Society of New York; First Fellow of the New Zealand Horological Institute; Past-Chairman of the Wireless Society of London and Radio Society of Great Britain.

Medallist Royal Society of Arts, London, Institution of Electrical Engineers, and Franklin Institute Philadelphia.

With a Foreword by

DR. H. SPENCER JONES, M.A., SC.D., F.R.S.
Astronomer Royal

N.A.G. PRESS LTD
LONDON

FIRST PUBLISHED IN 1940

By the same author
ELECTRIC CLOCKS
Published in 1931

PRINTED IN GREAT BRITAIN
BY UNWIN BROTHERS LIMITED
WOKING

CONTENTS

LIST OF ILLUSTRATIONS

FOREWORD

THE history of a long continued attempt to attain perfection in any particular sphere is always of great interest. It is nearly one hundred years ago since the first attempts to apply "galvanism" to horology were made. If, at the present time, something approaching perfection—for perfection is an unattainable ideal—has been reached in precision time keeping as the direct result of the application of electricity, it is because the successes and failures of many investigators during the course of a century have combined in helping to make clear the right lines upon which progress could be made.

Since Alexander Bain's first application for a patent in 1840, there have been more than a thousand published patents on this subject. The great majority of these were never heard of again; some contributed ideas that were later seen to be of value, but failed for other reasons; others proved more successful, not because the inventor had succeeded in achieving what he set out to do, but because he had accidentally and without realizing it, stumbled upon something of importance. Mr. Hope-Jones traces in a fascinating way the history of electric clocks from their earliest times and brings out clearly the conditions for success, showing where one idea here and another idea there have proved to be of permanent value.

The ideal to be attained was expressed by Sir David Gill in these words, which Mr. Hope-Jones quotes: "To maintain the motion of a free pendulum in a uniform arc, when the pendulum is kept in uniform pressure and temperature, and to record the number of vibrations which the pendulum performs, is to realize the conditions which constitute a perfect clock." The nearest approach to this ideal has been attained, through the collaboration of Mr. Hope-Jones and Mr. W. H. Shortt in the beautiful Shortt free-pendulum clock which, like many truly great inventions, is so simple that one is left wondering why it was never thought of before. But the account given by Mr. Hope-Jones makes clear what a great deal of thought and experiment were needed before this clock in its final form was completed.

The Shortt free-pendulum clock has attained a precision surpassing any hitherto attained by a pendulum clock. Many observatories all over the world use these clocks exclusively as their standards of time and the considerable increase i precision during the past fifteen or twenty years in time distributed from these observatories is in no small degree du to these clocks.

Mr. Hope-Jones is frank and outspoken, and has th courage of his convictions. He is always on the alert for parr and thrust against those who violate his principles of fait in what is essential. This is all to the good and helps to mak his book stimulating reading. He will not therefore object i I break a lance with him.

Any simple natural phenomenon, which obeys one definit law without perturbation, might be used to mark off equa intervals of time and therefore to serve as a clock. A oscillating balance wheel, a swinging pendulum, a vibratin tuning fork, a vibrating rod, and an oscillating quart crystal are some of the many phenomena that have bee used as a basis for marking off equal intervals of time. Th difficulty in attaining the perfect time keeper lies in th words "without perturbation." There is, for instance, n such thing as perpetual motion and the oscillation, swing, c vibration must be maintained, which necessarily causes som interference with the attainment of perfection.

I believe that, at the present time, the nearest approach t perfection in time keeping is provided by the oscillatin quartz crystal clock, which is certainly free from the sma irregular fluctuations and changes in rate to which the be free-pendulum clocks are liable and which prove so troubl some in providing time to a high degree of precision. The clocks are as yet in their infancy and Mr. Hope-Jones com ments on them as follows: "I see no prospect of maintain a sufficiently constant temperature with immunity from involuntary stoppages." Is not this akin to Lord Grimthorpe's criticism of electric clocks, which is quoted by Mr. Hope-Jones and the validity of which he has himself done so much to disprove: "Anyone who sets to work to invent electrical clocks must start with this axiom, that every now and then the electricity will fail to lift anything, however small?"

The use of quartz clocks, however, despite their superiority for precision time keeping, is likely to be restricted to observatories or laboratories that are responsible for providing national standards of time or frequency. They require much auxiliary apparatus which prevents them competing in simplicity with a pendulum clock. The free-pendulum clocks are therefore likely to continue to serve most purposes for which time is required with considerable precision.

That accurate time is more readily and generally available to the public than ever before and that the precision of the time supplied far exceeds what would have been possible a quarter of a century ago are due entirely to the application of electricity to horology.

Mr. Hope-Jones's book cannot fail, therefore, to prove of interest not merely to horologists but to a far wider circle.

H. SPENCER JONES

INTRODUCTION

This book was begun appropriately enough in the year when the scientific world is celebrating the centenary of the invention of the electric telegraph by Sir Charles Wheatstone, and exactly one hundred years after Alexander Bain came to London as a young man to seek employment as a journeyman clockmaker, with an introduction to Wheatstone.

Their inventions in electric clocks began the whole story of the applications of electricity to horology.

When first it was realized that if electricity is led round a piece of iron it makes a magnet of it, the idea of applying it to clocks was fairly obvious and did not long remain unexpressed, but the early efforts were mostly crude and futile, and in the sixty years that remained of the nineteenth century invention was so strangely unproductive of anything of value that it has been quite a question whether the digest of the historical chapters of "Electric Clocks" should not be altogether omitted.

Throughout the Victorian era clockmakers who knew little of electricity and electricians who knew little of clockmaking floundered along, ignorant of each other's work and learning nothing from their failures.

Yet their work was not entirely worthless, as they occasionally stumbled more by accident than design across a construction which utilized an important principle—none the less valuable because the inventors themselves failed to understand it or appreciate its meaning.

So we will review their efforts, if only to learn "how not to do it." My own education having been laboriously acquired by that process, I persuaded the editor to retain those chapters of "Electric Clocks" in a condensed form.

There is always an interest attaching to the pioneer, and I shall take you by the hand along the road through which the idea has wandered or progressed; I shall lead you down the primrose paths of pleasing mechanical and electro-mechanical devices, just far enough to show you the inevitable blind alleys, and then take you up and over the hills of difficulty to the straight road of scientific principles which will bring us to our goal.

If this book has any claim to be a contribution to the science of horology, it lies in the enunciation of the principles essential to accurate timekeeping and to the application of electricity thereto. The use of these principles gave us in the early years of this century a reliable system of electrical impulse dials, and what is more, it made possible that ideal of horologists, the FREE PENDULUM.

With the story of its development, and the regaining by England of world supremacy in accuracy of time measurement, "Electric Clocks" ended.

It covered a period of nearly one hundred years, in which the contributions of electricity to horology represented by a thousand patents were in brief—

(1) Numerous types of independent self-wound clocks, and methods of synchronizing them;
(2) Systems of electrical impulse dials; and
(3) Supreme accuracy of time measurement by means of the free pendulum.

And then came the revolution. The advent of the synchronous motor clock put an entirely different complexion upon the situation, and the very words "electric clocks" took on a new meaning. The general public, the average man without scientific interests, saw and heard of electric clocks for the first time in his life in the form of mantelshelf clocks in the electricity showrooms and the horologists' shops. It is only a comparatively few men interested in mechanics, in clocks and electricity, who knew of the previous applications of electricity to horology with which this book dealt. And, by a strange paradox, the electric clocks which are now becoming commonplace to the public are not clocks at all, since they have no pendulums, balance-wheels, or escapements with which to measure time, but are merely synchronous motors plugged into the electric light supply.

The co-ordination of all the sources of electrical supply in this country, which was begun by the Central Electricity Board appointed in 1927, has given us a uniform alternating current supply with a periodicity of 50 cycles per second. Within six years of getting to work the initial stage of its construction was practically complete, and early in 1936 they were able to report that the turbo-alternators in each of their generating stations were being kept continuously running at a speed so closely controlled that a synchronous motor clock operated by the supply could be relied upon to show approximate G.M.T. within a few seconds.

The engineers of the generating stations thus became the timekeepers of the nation, and at a bound we reach the stage where time is as free as the air we breathe, and as little considered. The average householder does not concern himself where his gas, water, and electricity come from or how they are laid on. He simply uses them. The number of those, therefore, who are interested in that delightful pursuit of accurate time measurement and clock enthusiasts generally will gradually diminish, but it is still a cult with thousands of devotees, and it is to them that it is hoped this book will appeal.

Additional chapters deal with the further achievements of the free pendulum in precision timekeeping in recent years, revealing not only nutation, but the effect of the moon on gravity. New ideas regarding the design of free pendulums are discussed, also the quartz crystal clock; the question of the conversion of sidereal to mean solar time and the driving of telescopes. The latest methods of time determination at Greenwich, and finally the timing of the Grid, are described with the various types of synchronous motors and their application to everything that takes cognizance of time, concluding with a chapter on time-keeping at sea.

F. HOPE-JONES

LONDON 1940

CHAPTER I

ELECTRIC PENDULUM CLOCKS

IN writing a book on clocks it is customary to begin with an essay on time itself and to attempt to define it. I will not break a lance with those who maintain that time has no existence apart from our way of looking at things. I will not drown you in the philosophy of Kant, nor will I take you into the shadowland of metaphysics. Suffice it to say that we conceive of *time* as flowing through our hands in one direction as does a river, and with poetic licence we say "the mill will never grind with the water that has passed," temporarily forgetful of the circulatory system which refills the river with the same water evaporated and returned in the form of rain. This conception of time is not a fundamental and ascertained law of nature. It has no real authority, but is begotten of our own experience, and we accept as facts the steadiness of the flow and its unchanging direction. Time is thus more than the mere difference between present and past, and *now* and *then*. We are rightly taught to use well that little stretch which concerns us, and I have been using mine in an attempt to measure accurately its rate of flow—a thing very imperfectly done in the past. Accuracy of measurement is fundamental to all science, and the physicist in his laboratory deals every day with problems in which time is an all-important element.

Just as I refrain from metaphysics, so will I refrain from all reference to sundials, clepsydras, candle-clocks, and sand glasses. They have a literature of their own, and it is assumed that my readers are more concerned with the scientific side of time measurement than its archaeology.

Let us therefore begin with the first efforts to measure time by mechanical means. They date from the end of the thirteenth century, but no clockwork of those early days remains, except perhaps the crowing cock in the Strasburg Museum.

The earliest existing clocks, made about 1379, are at Dijon, Rouen, and Paris. We know that they were in existence then or earlier, because Froissart described the ropes, weights, wheels, foliot balance, and striking gear with the greatest precision and detail in his flowery and romantic poetry.

The oldest we have in England are Salisbury and Wells. The Salisbury clock dates from 1386. References to it appeared in the Proceedings of the local Antiquarian Society in Victorian times, but it never seems to have been seen by anyone competent to assess its value in history. It has since been placed in the north transept of the cathedral. The Wells clock dates from 1392, and is now to be seen in operation at the South Kensington Science Museum. The Dover Castle clock in the same museum retains its original foliot balance and looks older, but is actually of a later date. The clock which the late Mr. Percy Webster discovered in an attic when the contents of Cassiobury, near Watford, were dispersed is of the same period; so also are those recently discovered at Quickswood, Herts; East Horsley, Surrey; and Wappenham, Northants. The oldest clock in England still at work is Rye and dates from 1506. If there be any others lost or forgotten in the belfries of village churches which have escaped consignment to the scrap-heap, or restoration by the vandal clockmaker, let us hope that their antiquity will be realized and that they will further enrich our museums.

In 1630 the Worshipful Company of Clockmakers was founded as an offshoot of the Blacksmiths' Company, and the brain of the skilled mechanic began to replace the brawn of the village smithy. The clockmakers of that day, however, had still no better means of timekeeping than the foliot balance or "verge," which was a horizontal inertia bar, centrally pivoted or hung on a flexible cord and rocked by two vanes engaging the teeth of a crown wheel rotated by a crude train of wheels with lantern pinions. This balance is shown in fig. 1. Its name is derived from the French verb *folier* (to play the fool), which it most certainly did. The rate

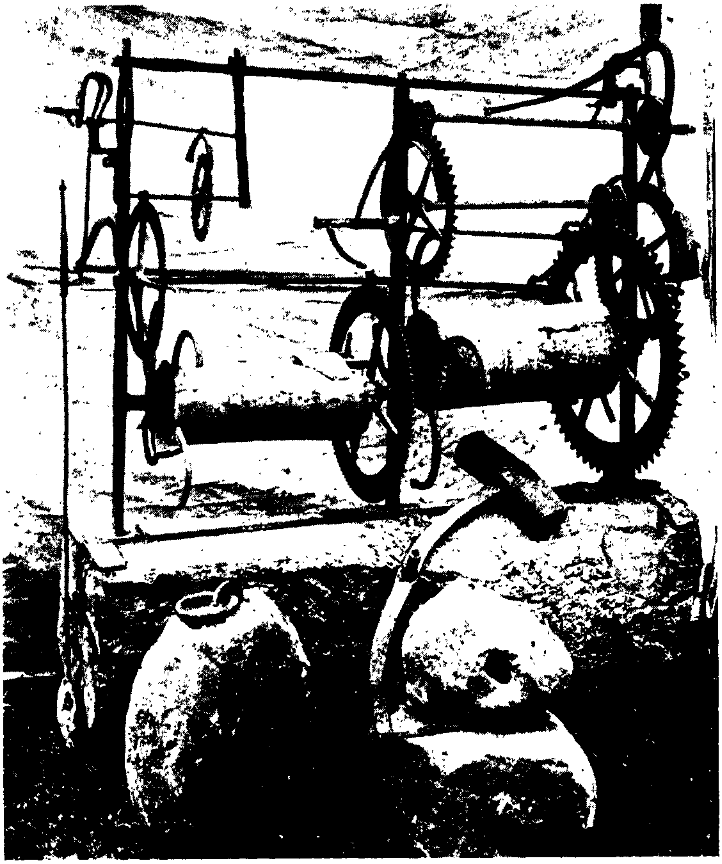

THE PORLOCK CLOCK

Probably dating from 1500. Evidence of the conversion from the Foliot balance to the anchor escapement will be seen on the left at the top. Winding of the stone weights is by the curved capstan arms on the left end of the barrels. Pendulum and hammer unshipped.

Photographed in the churchyard of Porlock, Somerset, by Dr. F. J. Allen

of the clock was altered by varying the moment of inertia of the arm by moving the weights. It may be seen in museums and in a few private collections in the form of brass lantern clocks of the fifteenth century. The clocks and watches of that day were all controlled by this "verge" balance, the only difference being the size. Until Galileo and Huyghens invented the pendulum there were of course no pretensions to time-keeping. The story goes that Galileo at the age of seventeen, inattentive to a sermon in Pisa Cathedral, timed the swinging of the great candelabra against his pulse.

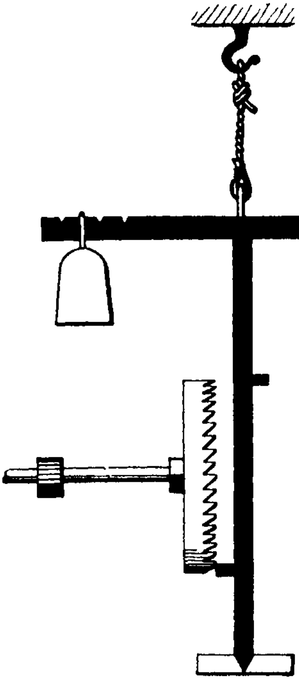

FIG. 1.—The "Foliot" balance or escapement

This is worthy of belief, since it so perfectly forecasts the philosopher who never admits text-book statements without practical proof. It took some courage in his day to question the dogmatic pronouncements of Aristotle and to demand experimental proof, and we still need his independence of mind. Even in this enlightened age the horological professors in our technical colleges need to be reminded that their text-books grow out of date.

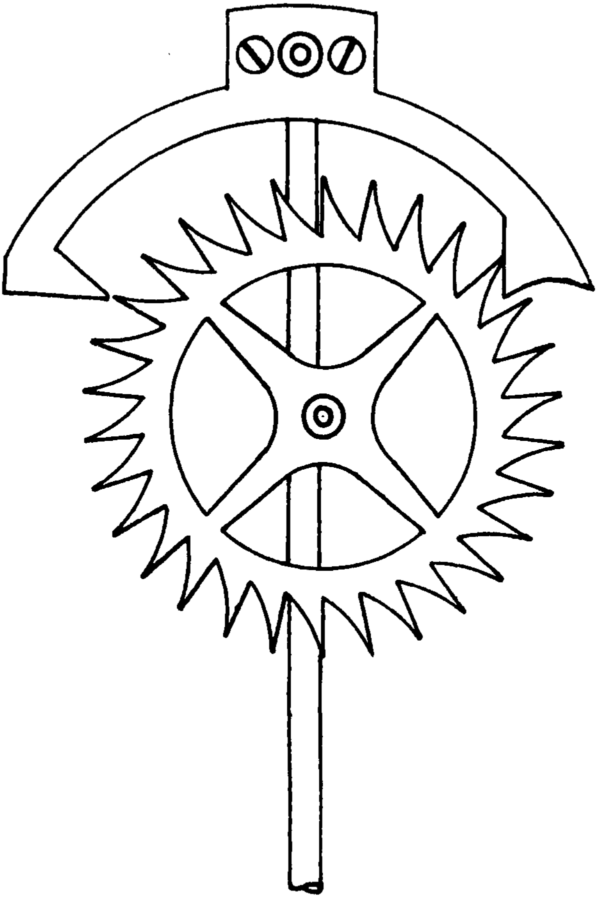

FIG. 2.—Anchor escapement attributed to Robert Hooke, circa 1670

In 1673 Huyghens published his *Horologium Oscillatorium* setting out the mathematics of the pendulum, and in 1675 Robert Hooke harnessed the pendulum to control the speed of wheelwork with his invention of the anchor escapement, illustrated in fig. 2. It is strange that the world should have had to wait for three hundred years for this means of regulating the running of a train of wheels. With the arrival of the pendulum began the halcyon days of English clockmaking, with which the names of Tompion and Graham will ever be associated. Tompion produced the long-cased grandfather clock, and Graham the dead beat escapement in the year 1725, designs which by their sheer merit imposed themselves upon humanity for over two hundred years, and timekeeping was suddenly lifted to an accuracy of a few seconds per week. Tompion and Graham lie side by side in Westminster Abbey, and there are those who say that English clockmaking died with them. It certainly lay in a state of stagnation for two hundred years, a long period barren of any marked advance in design or science.

The Graham dead beat escapement held the field as the most accurate until Riefler of Munich surpassed its performance in 1890, and supplied some hundreds of clocks fitted with the Riefler escapement to the world's observatories in the twenty years before the war of 1914. Thus we see that while England was the home and nursery of the science, two centuries of stagnation lost the lead to Germany.

This volume tells the story of the recapture of the record for performance for England by the free pendulum clock in 1923.

Why did the science of accurate time measurement cease to advance and come to a dead end two hundred years ago? What was the obstacle that horologists could not surmount? The answer is *the escapement*, that mechanical connection between wheelwork and pendulum which involved almost continuous interference with the pendulum and prevented it from swinging undisturbed in its own natural period of vibration. The subtleties of the escapement provided a lifetime's job for the scientists of two centuries, and the science of horology may be said to have existed for the amelioration of escapement evils. When it failed the only thing to do was to dispense with the escapement altogether. Was that possible? The answer is yes, and we shall see later how it was done.

After many years of futile attempts to apply electricity to horology, inventors turned their attention to *systems of electrical impulse dials*, an obviously sane and effective method of indicating uniform time throughout a large building, and a system was devised in 1895 on which a standard of British practice has since been established. The free pendulum was evolved out of this system, and a clear understanding of it and its principles is necessary. The surest and most pleasant way of acquiring that knowledge is to pass in review the electric clock inventions that preceded it.

In no subject is classification more necessary. The careless use of the term "synchronized clocks" has contributed to the prevailing ignorance and muddle-headedness which it must be admitted with regret is shared by the watch- and clock-making profession.

When, therefore, we talk of electric clocks let us make up our minds whether we mean—

(I) *Synchronizing systems*, in which a signal is transmitted at regular but infrequent intervals, such as hourly or daily, to correct the hands of independent clocks, whether they be electrically driven or key-wound.

(II) *Independent self-contained clocks*, in which electricity is used to store the power required to drive them or to keep their pendulums swinging.

(III) *Circuits of electrical impulse dials*, in which a master clock transmits impulses every minute or half-minute to propel the hands; or

(IV) *Synchronous motor clocks*, "plugged in" to the A.C. electric light supply and taking their time from the generating stations.

It will be obvious that among the master clocks in Class III there will be found many of Class II, and that they all, whether key-wound or self-wound, will be capable of synchronization by Class I.

It may surprise my readers to know that since Bain's application of 1840 there have been a thousand published patents on the subject of electric clocks, without counting those which never got beyond the stage of provisional application.

Accustomed as I have been to look through them in batches from time to time, the prevailing impression I have gathered is that very few of these inventors have taken the trouble to ascertain first what other people have done in the same line. Of inventors generally one must say that their education, if it ever comes to them at all, comes only as a result of costly experience in attempting to make and sell their inventions.

Not more than 10 per cent of these inventions have ever been heard of again. We must assume that either the difficulties of manufacturing and marketing have proved too great for the enthusiasm and ability of the inventor to overcome, or that their lack of originality and merit alone is sufficient to account for their oblivion.

Surely the patent libraries with their excellent indices, the proceedings of the scientific societies, the trade journals, and the popular science weeklies rob the inventor of all excuse for ignorance of his subject, through which he fails in nine cases out of ten to stand on the shoulders of those who have gone before him.

It is with a view of still further dispelling this ignorance and to encourage interest in the history of electric clock inventions that this book has been written.

CHAPTER II

ALEXANDER BAIN

The First Inventor of Electric Clocks. His Quarrel with Wheatstone

In the introduction I mentioned Bain as the first inventor of electric clocks. His patent, No. 8783 of October 1840, entitles him to that distinction, since he foresaw the various ways in which electricity could be used and expressed them in terms that are wide enough to serve as the basis of our classification to-day—with the solitary exception of synchronous motor clocks, which could not possibly have been foreseen.

Alexander Bain came to London in 1837 "to seek employment as a journeyman clockmaker," as he himself says. This was the year in which Cook and Wheatstone took out their first patent for the electric telegraph. Bain undoubtedly possessed intelligence and ability above his class, and he had ideas on telegraphic printing and electric clocks.

He sought assistance and patronage, and was introduced to Wheatstone on August 1, 1840. Wheatstone approved of him and his ideas and invited him to complete some of his models and submit them. This he did on the 18th of that month. For £5 down and the promise of £50 on completion Wheatstone bought so much of Bain's apparatus as related to printing telegraphs and, from these fateful interviews when electric clocks were discussed, arose a first-class inventors' quarrel.

Wheatstone had already considered the obvious applications of his telegraph to clocks, and he had discussed them with his friends. He read a paper before the Royal Society in November 1840, exhibiting a clock in the library. But Bain had already filed his first patent on October 10th, and thereafter he was convinced that Wheatstone had absorbed his ideas.

When we recollect that the fact that electricity could be conducted along a wire and could be made to do work by electro-magnetism had only just dawned upon human intelligence, that knowledge and experience were lacking, and that the science was in a hazy and nebulous state, that not even the terms "series" and "parallel" had been coined, we can only consider this patent as a remarkable achievement.

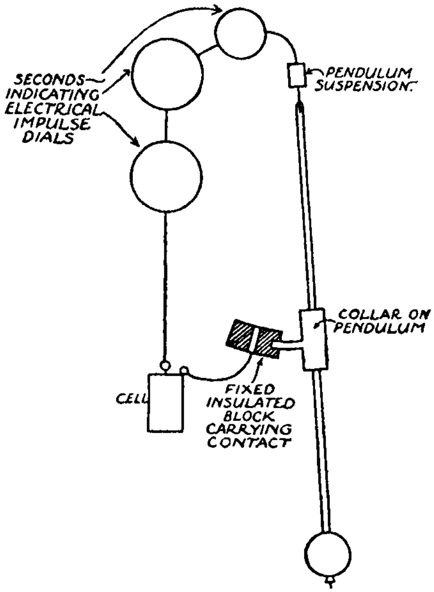

FIG. 3.—The first electric time circuit. Bain, 1840

Fig. 3 represents Bain's first conception of an electric clock system. The pendulum is of seconds beat and is driven by an ordinary key-wound clock movement not shown. A little curved bracket on its left-hand side rubs backwards and forwards along the surface of some insulating material bisected with a band of metal. Thus contact is made every second, and the electrical impulse is transmitted through a series of electrical impulse dials from a battery. The dial movement has a reciprocating armature picking up one tooth at a time, differing only in details of design from the accepted practice to-day. Bain's system was foredoomed to failure owing to his poor contact and to interference with the pendulum, but he at any rate clearly saw what was wanted and was the first to express it.

In May 1842 Wheatstone exhibited his electric clock in the Library of the Royal Institution, Albemarle Street. A reference to this in the *Literary Gazette* roused Bain, who wrote an indignant letter to the editor; but alas! it was ungrammatical and ill-spelt, and was published with the fatal footnote:

"Printed verbatim et literatim. *Fiat justicia, ruat coelum.*"

Wheatstone, then Professor of Science at King's College, demolished "this working mechanic formerly in my employ" —a statement not strictly true—to his own satisfaction in the next issue. He would not admit having received any benefit from Bain or his ideas, and charged him with infringing his own patents. Wheatstone brought up his heavy guns, statements from Isambard Brunel and other eminent engineers, who testified that they had discussed electric clocks with him early in 1840, but he had taken out no patents specifically for electric clocks in those early years, and my sympathies in this case are with the journeyman clockmaker. The employers' dice were more heavily loaded against the employees in those days than they are now, and we have only to look at Bain's pamphlet of 1843 "on the application of the electric fluid to the useful arts" and his next patent to realize his originality and vision.

This was no. 9745 of 1843, an "omnibus" patent, from which we select a few drawings for reproduction.

Fig. 4 shows his electro-magnetically driven pendulum, its bob and coil swinging between permanent magnets and its contact made at the top of the pendulum by a toggle, a little ball on a stem, falling over right and left as it swings, and driving two dials.

This will be recognized as the progenitor in the direct line of many clocks whose pendulums are electro-magnetically maintained, and I think we would do well to encourage a little of the Japanese veneration of our ancestry.

Note the earth battery, which of course corresponded to the Leclanché cell of our day, M and N being the zinc and carbon and the moist earth the electrolyte.

Of course, the little ball toggle contact was quite inadequate as a switch for the transmission of really useful electrical impulses, but Bain could hardly be expected to know that in those early days. He had, however, the great idea of a single series circuit maintaining the master clock and operating a circuit of dials.

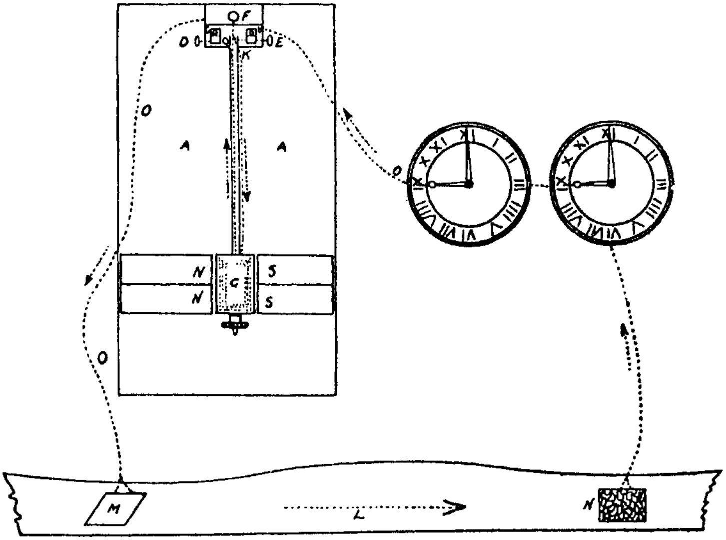

Fig. 4.—Magnetic pendulum. Bain, 1843

Fig. 5 represents in detail the two dials shown in fig. 4, that on the left being a polarized step-by-step electrical impulse dial movement, and that on the right a polarized electro-magnetic release of a key-wound clock, both of which are equally ancestral, having been steadily developed and improved into forms in common use to-day.

The arrangement of the moving coil C between the poles of the permanent magnets B is a very efficient one and needs to be so in view of the small power available.

Fig. 5 also forecasts the risk of a line disconnection in a large series circuit stopping a number of clocks and shows the series-parallel grouping now a common practice in modern electric time service.

Shortly afterwards, in 1845 and 1847 to be precise, Bain improved his contact and reversed the current at each swing, as shown in fig. 6, in which will be seen his metal bridge or sliding bar pushed backwards and forwards by a pin on the pendulum over the faces of contact blocks which are half ivory and half gold.

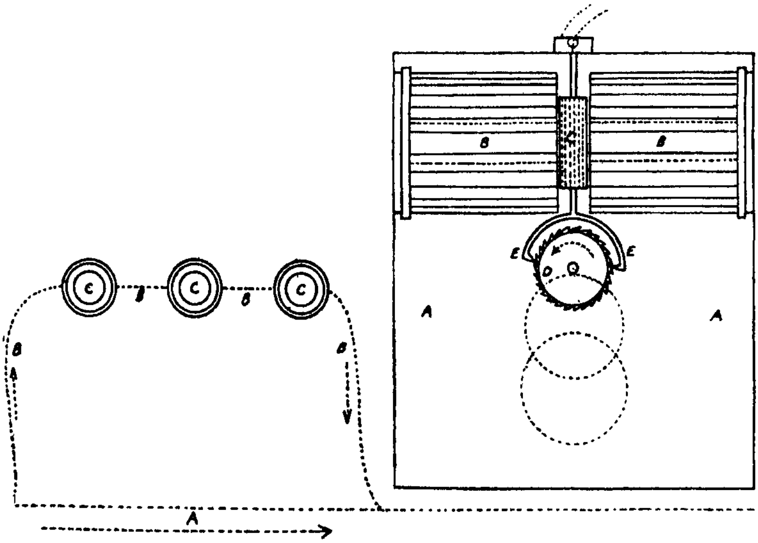

FIG. 5.—Dial driving and releasing. Bain, 1843

It will be observed that an increased arc will result in a shorter duration of contact and vice versa, thus giving a weaker battery correspondingly less or more time to pull.

I wish it were possible to do more than praise Bain as a pioneer, but truth compels the statement that his system was a failure, that not only his own clocks, but all those which were developed according to his methods were a cause of loss and disappointment and failed to survive the Victorian era. They brought electric clocks into disrepute and did much to arouse that deep-seated prejudice which the writer found it such a hard task to overcome.

Lord Grimthorpe, in *Clocks, Watches, and Bells*, says: "These clocks never answered in any practical sense; nor would anything but the strongest evidence, independent of the inventor, convince me that any independent pendulum directly maintained by electricity can succeed in keeping good time for any considerable period."

Two fundamental principles were flagrantly violated: the whole of the energy required for the purpose of making electrical contact was robbed from the pendulum and, apart from the resulting interference with the natural period of its vibration, the impulses themselves were a grave cause of disturbance and their value varied with the variations of current.

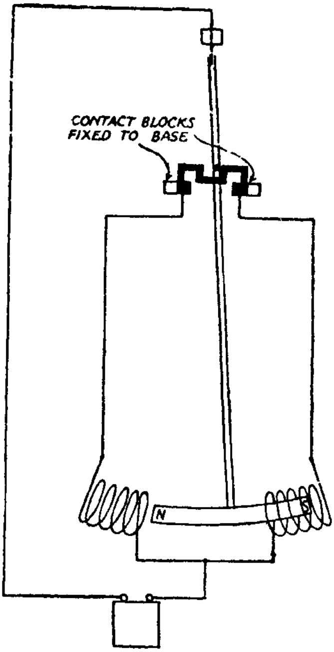

FIG. 6.—Reversing of current. Bain, 1843

It is easy for us to see that nothing substantial could be built on such foundations, yet even fifty years of failure were insufficient to teach these obvious truths and the errors still persist.

CHAPTER III

SIR CHARLES WHEATSTONE

The "Magneta" Induction System

We turn our attention to Wheatstone, a name to conjure with when the foundations of the electrical engineering profession were being laid. When we think of the dawn of telegraphy just a hundred years ago we do not forget Froment in France, Steinheil in Germany and Morse in America, but we rightly associate the first practical electrical telegraph with Wheatstone.

He was born in 1802, and was appointed professor of Physics at King's College in 1834, where he laid down half a mile of wire in the vaults to discover the time taken to transmit an electrical impulse along a line. His estimate of 250,000 miles per second as the speed of electricity was a good shot. He took out his first telegraph patent in 1837, and in the same year was elected a Fellow of the Royal Society, to whom he communicated his first paper on electric clocks in 1840. He was knighted in 1868, and died in 1875, having bequeathed to the working electrician one of his most useful tools—the Wheatstone Bridge.

The MS. of his 1840 paper on electric clocks is still on file at the Royal Society, but the illustrations of the model he exhibited in the library are missing. Taking an ordinary key-wound clock, he mounted alongside its 'scape wheel a brass wheel, shown in fig. 7, with sixty slots cut in its periphery, filled with wooden segments, and provided a spring to make contact with it—a primeval commutator, destined in a later age for the dynamo, the motor and the magneto, but impossible in a clock on account of its friction. He applied "a constant voltaic battery of a few elements," and the resulting impulses were transmitted to electrical dial movements operating every second.

This system soon disappeared, or perhaps never really saw the light. Neither transmitter nor receiver was good enough, and the current supply must have been precarious in those pre-Leclanché days.

He also described in this 1840 Royal Society paper "another kind of electric clock in which Faraday's magneto-electric currents are employed." An ordinary key-wound clock with a permanently magnetized cylindrical steel bar as a pendulum bob was arranged so that the bar oscillated within a coil. Its motion in a magnetic field induced a current transmitted to dials containing very light metal discs maintained in constant rotation, thereby moving the hands continuously.

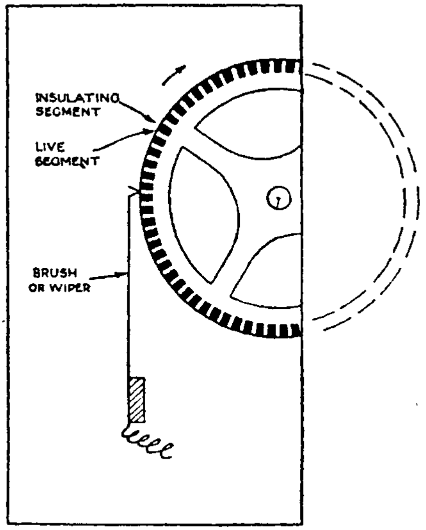

FIG. 7.—The first commutator. Wheatstone, 1840

The fact that the pendulum and the wheelwork that drives it should as far as possible be left alone to perform their true function of measuring time and should not be interfered with by contacts or be called upon to do work of any kind, is a truth which should have been obvious to all inventors.

The history of the development of electric clocks, however, reads otherwise. It has been my custom, the habit of a lifetime, to apply this acid test to electric clock inventions, thus to discriminate between good and bad, to explain the disappearance of past systems and to estimate the success or failure of new ones according to the extent to which the clock is robbed of its power for contact-making purposes.

Perhaps it is as well that such egregious examples come before us at this early stage in our review. "Better a little chiding than a big heartache"; better a little plain language now than more polite but perhaps tiresome reiteration. Consider fig. 7, illustrating a commutator carried upon a 'scape wheel arbor. If the spring is strong enough to make a good contact, it spoils the timekeeping or stops the clock; if we weaken it, we make a bad contact. We are between the devil and the deep sea, due to the whole of the energy required being stolen from the clock.

And what shall we say of the use of the pendulum itself as a magneto-electric generator, as shown in fig. 8? What sort of timekeeping would you expect from a clock overdriven by a heavy weight, so that its pendulum bob may swing through a bath of treacle or a strong magnetic field? And how could you expect the faint resultant impulses to be of any real use for driving clock hands?

We cannot doubt Wheatstone's knowledge of Galileo and Huyghens. He must have known something of the mathematics of the pendulum and of the achievments of Tompion, Harrison, Mudge, and Arnold in the century immediately preceding his own. Such ruthless interference with the freedom of the pendulum was enough to make them turn in their graves!

Wheatstone's clocks were installed in the Royal Institution in 1873, but were abandoned soon after the death of the inventor in 1875. The master clock is now in the Science Museum at South Kensington.

But Wheatstone's reputation rests securely on other foundations. He taught us the alphabet of electrical engineering almost before it existed. He was the first to appreciate Ohm's

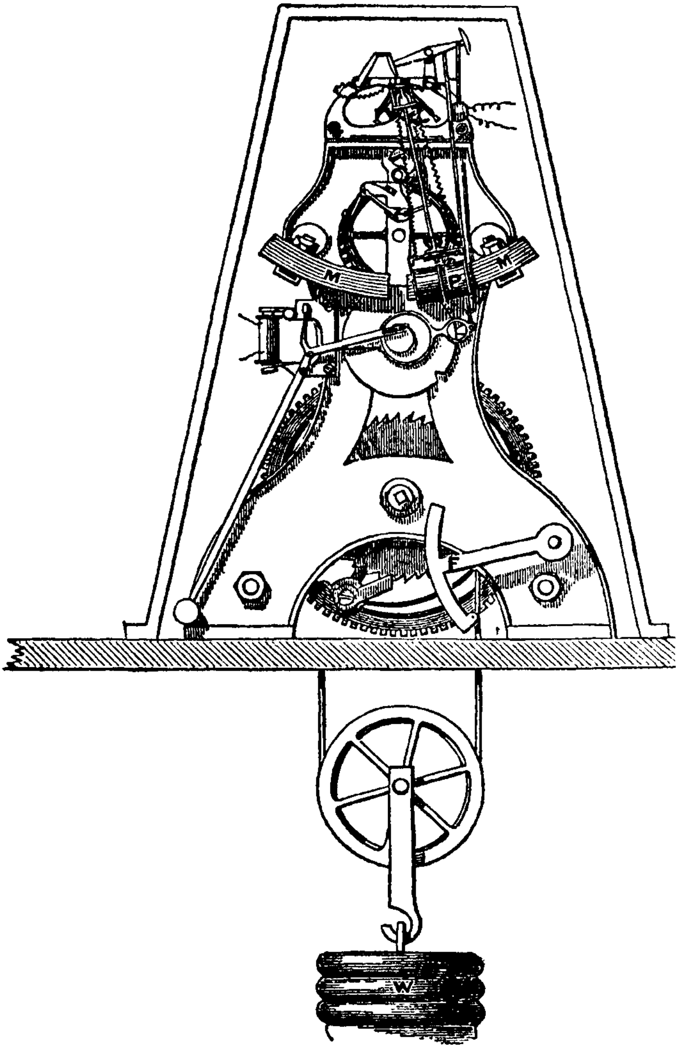

Fig. 8.—The bob of the pendulum P is a coil surrounding magnets MM over which it is forced to swing. Wheatstone, 1840

law, I = E/R, E = IR, R = E/I, without which every electrician is blind and impotent.

And ultimately the principles underlying his magneto-electric system of clocks were applied in a radically different manner by Martin Fischer of Zürich in 1900, who produced the system known throughout the world as the "Magneta."

Fischer made two fundamental alterations: (1) his magneto-electric generator was driven by a separate train of wheelwork, let off by the going train of a key-wound clock which was otherwise uninterfered with; and (2) he generated his impulses once a minute instead of every second.

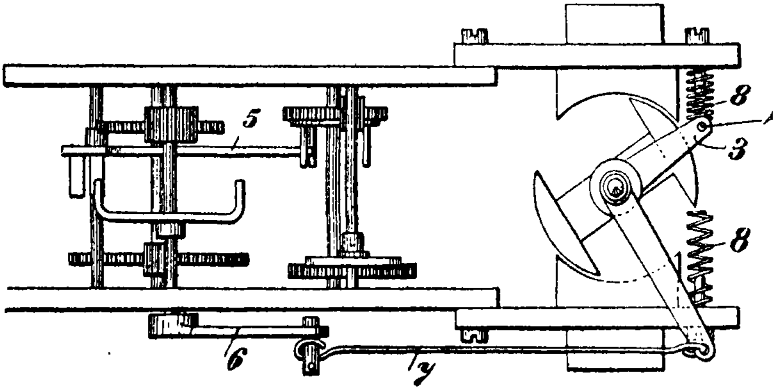

FIG. 9.—Martin Fischer, 1900. "Magneta"

The arrangement is illustrated in fig. 9, which shows a horizontal section through the master clock. The releasing lever 5 forms the connection between the two trains of wheelwork, the power train below and the going train above. When the latter releases the lever at the end of a minute the crank 6 is free to make one revolution, and by means of the connecting rod 7 it gives the armature a rapid to-and-fro vibration, banked by the springs 8, which not only reduce shock, but conserve some of the energy that would otherwise be lost in starting and stopping. The dial movements are of course of a polarized type and are designed for quick action, leaving a spring to do the work of moving the hands. The inductor is highly efficient, the magnetic field being completely enclosed in iron. It works at a much higher speed than Wheatstone's, and the space available for the motion of the armature is unlimited. The duration of the impulses varies from 0·1 to 0·2 sec., according to self-induction, etc.

The conversion of small amounts of mechanical energy, isolated in point of time, into amounts of electrical energy is at best an inefficient business. While Wheatstone failed in trying to deal with a very small quantity every second, Fischer succeeded with a much larger amount every minute. Unfortunately a master clock capable of operating a large circuit of small dials, or even a small circuit of large dials, on this system must be costly and cumbersome compared with one that has only to operate a switch.

The arguments in favour of an induction system were so well stated by Wheatstone in the rare pamphlet from which fig. 8 is reproduced that I cannot do better than give some extracts from it, taking care to use inverted commas lest you should think I am quoting from the latest printed matter of the Magneta Time Co. Ltd.:

"Various systems of electric clocks have been suggested and tried; but they have all practically failed, principally by reason of the oxidation of the contacts at those points where the circuit is periodically interrupted."

"The system of magneto-electric clocks has been designed so as to be effectually free from this objection. The maintaining power is supplied by magneto-electric currents developed in a coil of wire which is made to oscillate over the poles of permanent magnets. . . . In this way the whole wire circuit remains unbroken, and the currents are alternately inverted without any making and remaking of contacts (which are the chief source of failure of the electric system) being employed."

"A single motor, on this principle, will actuate sixty or seventy indicating clocks in the same circuit."

CHAPTER IV

SYNCHRONIZATION

Sympathetic pendulums. Forcible correction of the hands

NOTHING having come of Bain and Wheatstone's inventions in the twenty years during which telegraphy was jumping to its job (1837–57), Mr. R. L. Jones, the stationmaster of Chester, evolved the idea of sympathetic pendulums by simply applying Bain's electro-magnetic pendulum bob (see figs. 3 and 4, Chapter II) to existing key-wound clocks. His patent no. 702 of 1857 claims the obvious advantages of perfect synchronization, of independent life in case of electrical failure, and small current consumption. He applied it with success to his own turret clock at Chester and to a turret clock in the Victoria Tower in Liverpool.

Then Mr. F. James Ritchie of Edinburgh took hold of it and supplied some observatories with pairs and triplets of sympathetic pendulums. In 1873 Ritchie carried it a step farther. Realizing what a very small expenditure of electrical energy was required to keep two tuned pendulums in phase, he dispensed with the spring or weight-driven maintenance with its merit of independent life, and propelled as well as synchronized the sympathetic pendulum by impulses resulting from the closing of contacts *a* and *b* by pendulum O shown in fig. 10.

Ritchie read papers before the Royal Scottish Society of Arts in 1861 and 1873, and before the Royal Society of Arts, London, in 1878. Figs. 10 and 11 are taken from the latter. Ritchie's method of operating the motion work necessary to drive the hands of his clock is shown by fig. 11. The gravity levers A B are lifted by each semi-vibration of the pendulum, and on their fall they propel the motion work and the hands by the pallets *a*, *b*, locking the 'scape wheel by the stops a^2, b^2.

It is necessary that the pendulums to be controlled or impelled should be regulated in the first place to a fair degree of accuracy, as the more they are out of sympathy the more will the electro-magnet be required to interfere with the free action of gravity; and, if badly out of regulation, a temporary cessation of the seconds synchronizing currents would allow a pendulum to get so far out of phase that when re-established the electrical impulses would directly oppose its swing and bring it to a standstill.

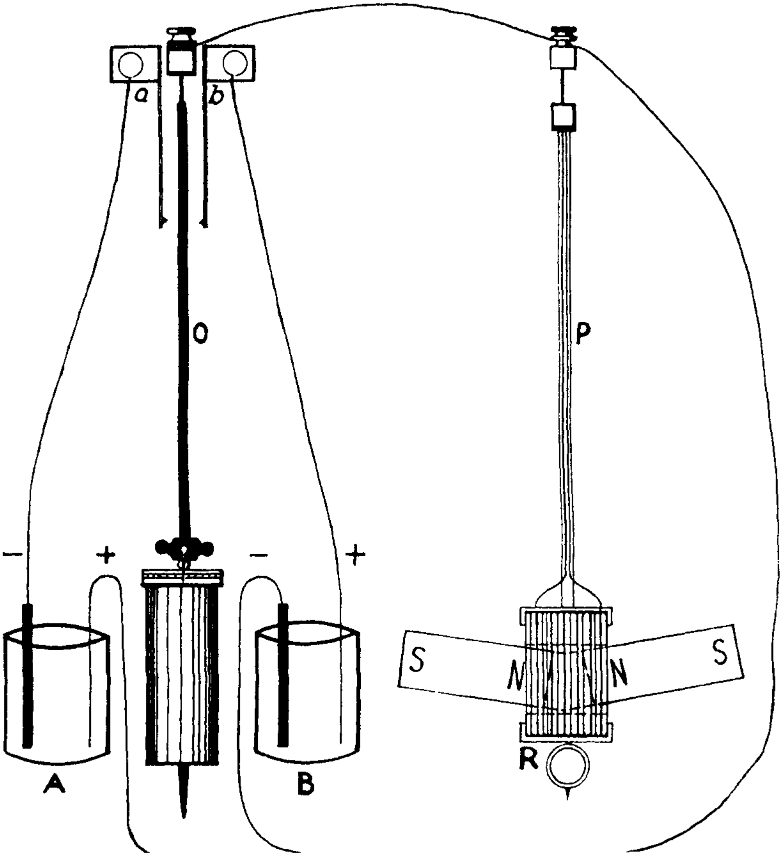

FIG. 10.—Sympathetic pendulums. Ritchie

These experimenters made no note of the extent of controllable error, nor did they attempt to explain the effect of the electro-magnetic forces they applied on the timekeeping. We can only conclude that they were unaware of the effects of varying arc upon circular error, of the "back E.M.F." generated in their coils, or of adding to or subtracting from the force of gravity by operating before or after zero.

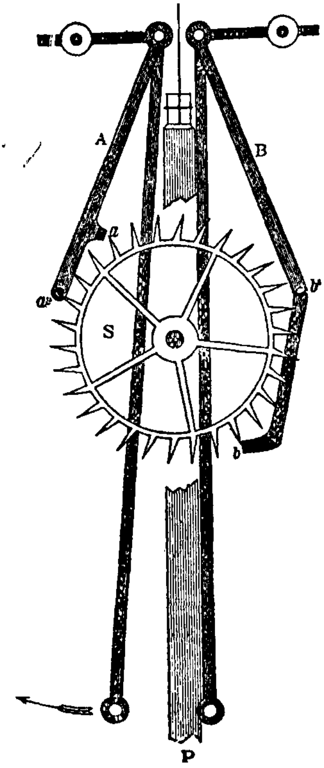

FIG. 11.—Reversed gravity escapement. Ritchie

Although this system had an exceptionally good trial,—it was no small advantage to have the championship of a good old firm like James Ritchie & Sons of Edinburgh behind it for twenty years,—and was installed in several important buildings, sympathetic pendulums of seconds beat, either with or without maintenance, have not come into general use in this country.

The casual and happy-go-lucky spirit of the electric clock inventors of the last century seems to have led them to say, "here is an electro-magnet; with its aid we can pull this clock back and forward just as we want." Their disregard of horological laws and electro-technics is such that they cannot even claim to have paved the way for the French system of synchronization by means of half-seconds sympathetic pendulums, though at first sight they appear to be its parent.

This French system was evolved independently upon foundations laid by the late Professor Charles Féry, and developed by Marius Lavet, LeRoy, and Brillié Frères, all of

Paris. The latter's half-seconds clocks, individually and in synchronized groups, are performing duties of the highest responsibility in the Paris Observatory, and the Brillié "pendulette" is widely adopted on a commercial scale.

Their designs deserved to succeed, since they are based on a mathematical analysis of the actions and reactions of a permanent horseshoe magnet carried by the pendulum through a magnetic field. For this they have to thank the late Professor Cornu, whose work has been made accessible by the facile pen of Marius Lavet. I know of no equivalent work attempted in our country or discussed in our language and it is to be regretted that our horological schools ignore these questions on which the future of our industry depends, favouring instead the dead language of escapements and breeding "text-book inertia" in the minds of their students.

The Brillié pendulette is illustrated in fig. 12. It will appear again on page 220 in the chapter on circular error. Its synchronization is achieved by passing the controlling impulses through its electro-magnet, with the result that the phase of the pendulum is altered as required, a very small amount at every swing. A short pendulum, a light bob, a large arc, and a solenoid form of magnet are essential.

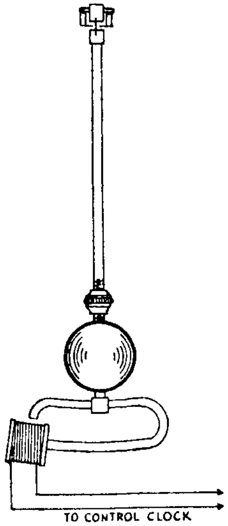

FIG. 12.—La pendulette. Brillié

At the British Horological Institute in November 1929 I demonstrated a radically different method of maintaining and synchronizing half-seconds pendulums by signals transmitted at widely spaced intervals such as half-minutes. The electro-magnet which receives them is fixed at a point a little to one side of the pendulum when at rest, the armature being carried at the centre of the pendulum.

Synchronization is effected automatically by means of the circular error. With precise unidirectional impulses of short duration every half-minute, a half-seconds pendulum carrying an armature over a fixed electro-magnet can be maintained and held in firm synchronization even if it be out of regulation by two or three minutes per day.

If the half-seconds clock is slow and the armature on its pendulum has not arrived at its optimum position relatively to the electro-magnet when the impulse arrives, the pull will be weak and the arc will drop. The resulting decrease in the circular error will cause the pendulum to gain and the armature and electro-magnet will get nearer to their optimum position; the pull exerted by the impulse will increase and the arc will tend to go up again, with the result that the pendulum will finally settle down to that arc and circular error which is needed to keep it in perfect step with the transmitter of the half-minute impulses.

In 1929 I could see no other use for this method than a convenient way of indicating seconds on a half-minute impulse circuit of electrical impulse dials. Since they are essentially silent in operation they were used in the studios of the B.B.C. It was not until seven years later that I found that a pendulum of half-seconds beat was the right thing for use as a slave clock for a free pendulum of seconds beat, and on a later page you will see how this "silent sympathetic slave" is ultimately destined to come into its own as the handmaid of the finest precision clocks in the world. It is an instructive example of the value of research patiently carried through to apparently useless results, which, however, only lie dormant and are ready when called upon to confer undreamt of benefits.

Bain and Ritchie were obviously unaware of the ease with which a half-seconds pendulum could be held in synchronism as compared with a seconds pendulum, and it is not surprising therefore that Ritchie wandered off into two other methods of synchronization of ordinary clocks—the method of (1) forcible correction of the minute hands, and (2) the method of a checked gaining rate.

The former, improved by Lund, gave us the Standard

Time Company's service of hourly signals and clock correction, established in London in 1876 and still running: Lund's minute-hand clip and the zeroizing stop-watch action now in use are illustrated in figs. 13, 14 and 15.

A somewhat similar arrangement is adopted by the Self-Winding Clock Company of New York, and an installation of their clocks is still in use on the underground railways of London, controlled by a master clock at Lots Road Generating Station.

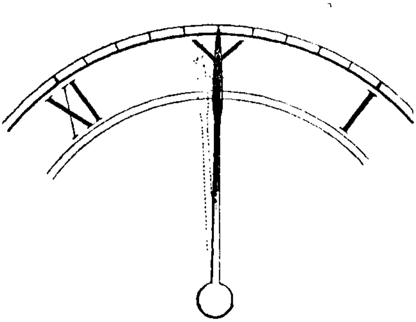
FIG. 13.—Forcible correction of hands. Ritchie

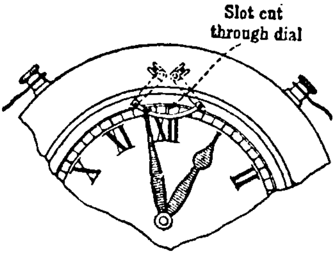

FIG. 14.—Minute hand clip. Lund

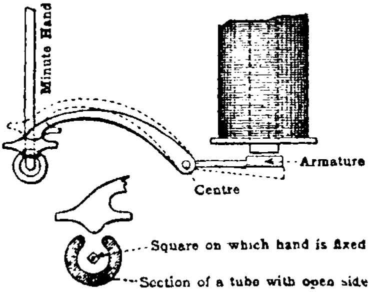

FIG. 15.—Standard Time Co.'s method

Early in this century trouble was experienced in the overhead lines devoted to the distribution of the hourly time signals in London, owing to the Telephone Company's adoption of the central battery system. Heart-shaped cams could not be exposed to the risk of stray impulses due to charged wires falling upon the time lines, and I devised a "rocker" synchronizer which rendered such faults innocuous.

This consisted of a pair of magnets, one of which would drop a little regulating weight upon a tray carried by the pendulum if it required acceleration, and the other would lift it off to slow it. The hourly synchronizing signal was shunted into either magnet by contacts on the master clock dial.

In the United States of America, thanks to the fact that their network of telegraph lines is not in the hands of the Government, the self-wound clocks of this company are spread over the whole of North America and are mostly synchronized by the Western Union Telegraph Company.

The self-wound clocks of the Hamilton-Sangamo Company are provided with subsidiary rotary motors, which correct the hands by Breguet's method described in the next chapter, but do not regulate the rate of the clocks.

Ritchie renounced forcible correction of the minute hand in favour of the checked gaining rate. I take fig. 16 from his 1875 Society of Arts paper. The synchronizing current of 15 sec. duration, terminating precisely at the hour, is received by electro-magnet A, but the armature B with extension arms D and E does not move until the clock hand gets to the hour and the notch in cam M is able to receive the end of E. A pin in the end of D then holds up the clock until the cessation of the current, when the lever falls away.

The Normallzeit Gesellschaft of Berlin attempted a service in London with the reporting-back system of Puttkammer. Their method of checking the gaining rate was excellent, and consisted simply of a one-sided crutch which left the pendulum to swing idly for a period determined by the signal, but the war put an end to their activities in this country in 1914.

It will be observed that in these systems the clocks stop and proceed when the synchronizing signal permits them to do so. We shall meet with other instances of this and, though they should all be included under the heading of synchronization, they will be more conveniently dealt with in later chapters describing the clocks with which they are associated, such as the Hipp "Butterfly" escapement used by

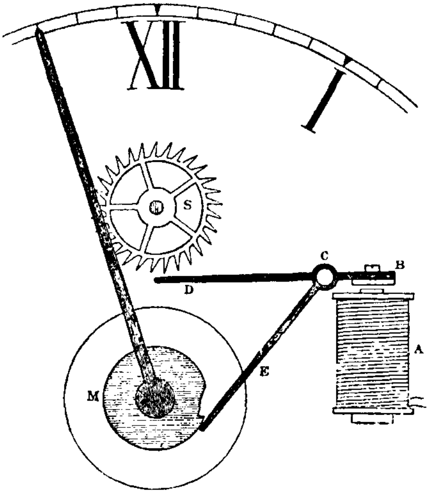

FIG. 16.—Checked gaining rate. Ritchie

Messrs. Gent in their waiting train movement, and by the engineering department of H.M. Post Office; in the control of rotary motors and in the method by which the synchronome free pendulum holds its slave clock in synchronization, involving in one case a checked gaining rate and in the other an accelerated losing rate.

CHAPTER V

SYNCHRONIZATION (*continued*)

Breguet's "Pendule Sympathique," Augustus Stroh, and R. *J.* R*udd*

I HAVE reserved a chapter for that class of synchronizer which seeks to alter the rate of a pendulum as a result of, and to the extent of, its past error; not because it is of any practical value or is the parent of any commercially successful system, but because it is a very pretty problem, full of intellectual and mechanical interest as an exercise and recreation. I promised to lead you up some pleasant bypaths, and this is one of them.

One does not expect the story of synchronization to begin before the introduction of electricity, our idea of it being essentially based upon telegraphing a time signal, yet it actually commences in the year 1793, when Breguet, that incomparable mechanical genius, invented his *pendule sympathique,* which is illustrated in fig. 17.

These clocks are very rare, and no two were made alike. The late Sir David Salomans told me that King George III possessed one which is still at Windsor. The one illustrated was made in 1812. It is signed by one of Breguet's best men, Raby, and is said to have cost 25,000 francs.

There is a record that one was sold to the French Minister of Foreign Affairs. At the Court of King Louis XIV it was not customary to go to bed sober, but let us assume his lordship capable of placing his watch in the receptacle prepared for it on the top of the clock. That is all he need do; he may leave the rest to its mother—*la mère horloge.*

During the night the watch will be nurtured and corrected by this model parent; it will be wound up and its hands set to time; more than that, if its rate is wrong, it will imbibe

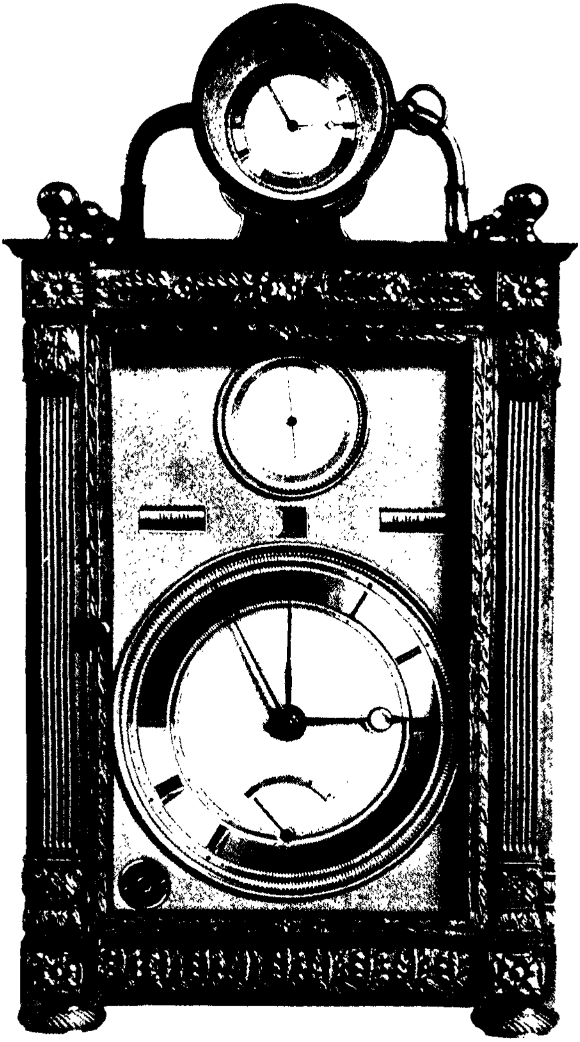

BREGUET'S PENDULE SYMPATHIQUE

such synchronization as it needs during the night, since its doting parent, with more than human ability, will measure precisely how far her child has strayed from the paths of virtue during the day and will alter its regulator accordingly, fast or slow, fitting it to take up again in the morning its daily task of influencing its owner to lead a more regular life. We shall see how this is done by referring to fig. 18.

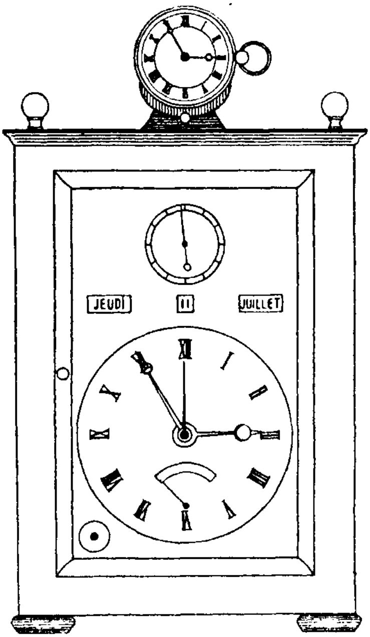

FIG. 17.—La pendule sympathique. Breguet

In the watch is a separate train, like an alarm train, wound independently. Mounted on the cannon-pinion is a pointed cam A, which is forced into the zero position by means of the lugs C, C′ on the wheels B, B′, when the synchronizing signal received from the clock lets the setting-train off and the wheels B, B′ make one revolution in the direction of the arrows. If the watch is fast, the cam of course is turned backwards. While so turning one of the two clicks G, K, which it carries engages with a serrated rack E, E′, connected by intermediate levers M, N with the regulator of the watch. The regulator is thus moved towards "slow" an amount varying with the error of the watch at the moment when it was reset. Conversely, if the watch had been slow, the cam would have been turned forward, and in so turning the click (pointing the other way) would have engaged with the serrated rack and moved the regulator towards "fast." The

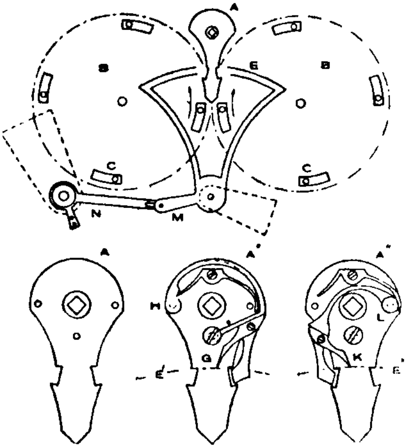

FIG. 18.—Error and rate corrected by Breguet

click not in action is swung out of the way about the pivots H, L in a manner which need not be described. Owing to the connection between cam and regulator being by ratchets and not by direct gearing, the regulator can take up, within limits, any required position with respect to the cam.

Breguet neither wrote nor published any account of this work, and the invention was probably unknown beyond his immediate circle. Not that this mattered from any practical point of view, because it could serve no really useful purpose before the days of the electric telegraph.

In chapter III I referred to Wheatstone's master clocks as being hopeless timekeepers, since their pendulum bobs were called upon to act as magneto-electric generators. Now

Wheatstone had the advantage of the collaboration of a very clever mechanic, Mr. Augustus Stroh, in the production of his many inventions. In 1869 Stroh set himself the task of synchronizing these master clocks. He showed me a model of his synchronizer shortly before his decease at an advanced age in 1914. He made no mention of Breguet's synchronizer, and I don't think he was aware of it.

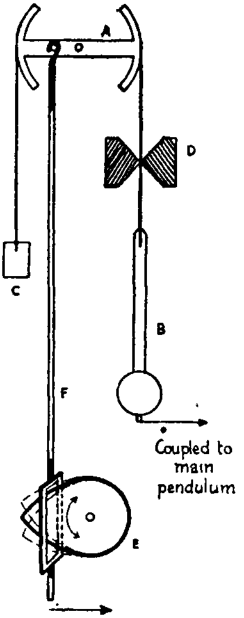

FIG. 19.—Synchronizer by Augustus Stroh

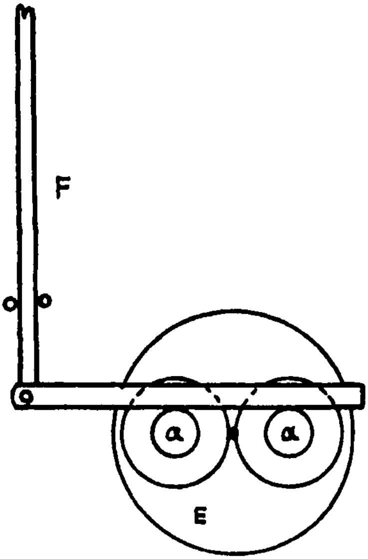

FIG. 20.—Feeler and magnet-cam. Stroh

I take fig. 19 from his 1869 Patent no. 3208. A is a rocking beam carrying on the right a small subsidiary pendulum B; its suspension spring passes between fixed jaws D, and its bob is coupled to the main pendulum. The little pendulum is counterbalanced by a weight C, and its effective length obviously will be altered by rocking the beam A. This is accomplished by the rod F, or "feeler," and the cam E mounted on the minute wheel. The synchronizing signal pulls the feeler in the direction of the arrow, so that the vertical slot, shown in perspective, embraces the point of cam E, and F is pushed up or down according to the position of the cam and the error of the minute hand fast or slow.

The operation of the feeler F by the synchronizing magnet is not shown, but a very ingenious alternative combination of feeler, magnet, and cam is shown in fig. 20 (Stroh's patent, fig. 5). The synchronizing electro-magnet itself is pivoted and rotates with the minute wheel E of the clock, and its armature is pivoted to the feeler F, which now works vertically in guides. This armature lies loosely upon the poles of the magnet and will rock on either pole as a fulcrum, thrusting F up or down in accord with the angular error of E.

If the amount of the correction is exactly what is required, then the cam or magnet E will be the same amount slow when the next signal arrives, and no further movement of F will occur; but of course it would be practically impossible to make the correction exact.

Let us call the amount of the error of rate that the synchronizer is capable of correcting at each operation the correction constant "K." If $K = \frac{1}{2}$, the error will be halved at each operation and rapidly reduced to a negligible amount. If the correction constant is more than enough to do the job, i.e. K is greater than unity, there will be overshooting and rocking, and the rate will take longer and longer to die out the nearer K is to 2. When $K = 2$ it will oscillate the full amount of the error, and if K were to exceed 2 the oscillations would increase in amplitude until they became infinite. It will be observed that only when the pendulum is of the original and proper length will the hands show correct time. Whenever there is any adjustment to be done as a result of rate, the hourly or daily synchronizing impulse will correct the pendulum, but will leave the hands permanently fast or slow to the extent of the largest last corrected error.

Thus we see the superiority of Breguet's method. He sets the hand to zero every time; consequently its angular position when the next synchronizing signal comes through is a true measure of the error in its rate, and the direction and extent of the corrective movement of the hand determine the direction and extent of the regulation.

Another synchronizer that obeys the same laws as that of Augustus Stroh was invented by R. J. Rudd of Croydon in 1898. The illustration of it (fig. 21) is taken from his patent no. 19337 of that year. Needless to say, he had never heard of Breguet's or Stroh's methods. Inventors rarely know anything of the work of their predecessors, and occasionally they are all the more original as a result of embarking on a problem afresh and with a more open mind.

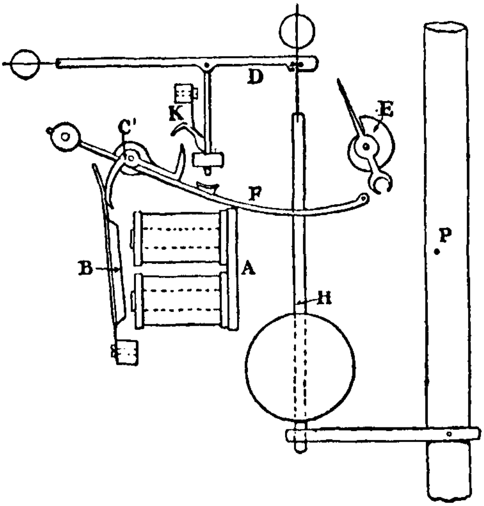

FIG. 21.—Synchronizer by R. J. Rudd

In fig. 21 A is the synchronizing magnet operating the armature B, which raises the feeler F through the medium of the spring attaching it to the Z-shaped lever C, which latter releases the clutch K and allows the lever D, which is provided with pins embracing the spring of the short pendulum H to be reset into whatever position may be dictated by the cam E. The use of a short pendulum linked to the main pendulum is a convenient means of "diluting" the synchronizing effect.

It will be observed that the regulator is set afresh by each signal, so that there can be no cumulative action and no "rocking," except when the value of the correction is greater than is needed, in which case there will be a few diminishing oscillations. If a seconds hand was provided, its position would not be corrected automatically; the clock having settled down to the closest performance it is capable of, one would then set the hand to zero. If afterwards one deliberately upset the rate of the pendulum, the synchronizer would correct it, the cam and the hand finding a new position, and the error of the latter would indicate the amount of the correction effected.

So far as I am aware, this is the only rate-correcting synchronizer in my time that has ever been given a real job to do. It was actually applied to a turret clock! It did the job well, but it was never called upon to do another.

Is not this a striking example of the inability of the average inventor to gauge the practical value of his creations? Though clever and effective, it was never really wanted, and never earned its patent fee even in the age of telegraphed time signals, and certainly will not do so now.

Yet it has a little niche of its own in the history of horology, because by means of it its inventor achieved the first free pendulum. But that is another story, which will be dealt with in its proper place.

Unfortunately, none of these inventors—neither Breguet, Stroh, and Rudd—explained what he was doing or why he adopted his particular methods. It has been left to me to ascertain and formulate the underlying principles, and, whilst that has been a pleasant task, one cannot but regret the want of that publicity which would have discovered them in their own generation and would have given us an instructive chapter on these principles in our horological text-books.

I have often referred to the way in which patentees rush into print without any effort to ascertain whether their inventions are original or useful. The indices of the Patent Library are exhaustive, but unused by those for whom they are mainly intended, whilst the patent files themselves are stuffed with rubbish old and new. What is good is usually old, and what is new won't work. Inventors are prone to vanity, and pride goeth before a fall.

It seems hardly conceivable that though this problem of synchronization by correction of rate was solved in 1793, 1869, and 1898, other synchronizing systems which do not synchronize at all but only rock the error, have been "invented" and solemnly patented by others over and over again.

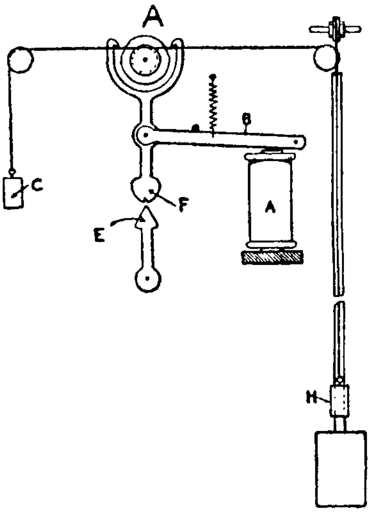

FIG. 22.—A fallacious synchronizer

I reproduce from a contribution to the discussion of my Institution of Electrical Engineers' paper of 1910 an illustration of one of these fallacious synchronizers in fig. 22. At first sight it appears to be in principle identical with Stroh's synchronizer, but the feeler F in this case raises or lowers a collar weight on the pendulum H by means of a winch A; the direction is dependent upon the position of the pointer E to the right or left and the amount on the distance of E from its zero position.

A little reflection will show that although the pointer E may be indicating correct time when the signal arrives, the rate may, and probably will, require correction, which it will not get.

On the other hand, if the rate is correct when the signal comes along, the dial may (and almost certainly will) be wrong, and the perfect rating will be upset as a result.

In fact, instead of synchronizing, the mechanism only "rocks" the error backwards and forwards, fast and slow. The wave-lengths of the oscillations are of course dependent upon the amount of correction effected by the synchronizer at each hour, but the amplitude of the waves will never diminish. The mistake is due to the confusion of two different things, the rate of the clock and its indicated error. This system attempts to synchronize from the latter by repeated alterations of the rate proportionate to the extent of the error; but, these alterations being cumulative, an error of equal value is piled up in the opposite sign. In fig. 23 the initial error is taken as being + 2 per hour (whether seconds or minutes is of no consequence), and it is assumed that an error in the pointer of that angular dimension will enable the synchronizing feeler to lower the weight on the pendulum one-half of the amount necessary to correct that error. The rate appears in steps as altered hour by hour by the synchronizing signal. The thicker line shows the divergence of the hand from true time, or, in other words, the indicated error.

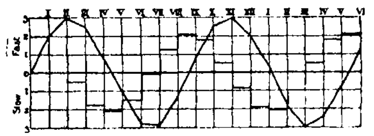

FIG. 23.—Rocking a rate

If R is the rate and K the correction constant, then approximately $\frac{R}{\sqrt{K}}$ = amplitude of the vibration and $\frac{2\pi}{\sqrt{K}}$ = period of vibration. Thus in the above curve the amplitude is 2·828 and the period 8·9 hours, and if we make $K = \frac{1}{4}$, the amplitude is 4·0 and the period is 12·56 hours. If the correction is exact (K = 1), the amplitude is 2 and the period

6·28 hours. If therefore the synchronizing line broke down, the interruption would be just as likely to occur when the rate was at its maximum, minus or plus, as when near zero.

It is more kindly not to mention the authors of these blunders by name, but I quote the patent numbers of some other typical ones for the benefit of the serious student, viz. no. 2425 of 1905 and no. 9287 of 1911.

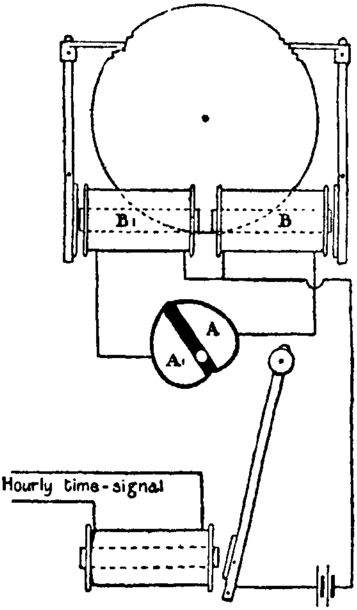

FIG. 24.—Rate and error corrected. F. Hope-Jones

We have learnt from Breguet that the ideal synchronizer is one that both corrects the rate and sets the hands. There is no difficulty in doing this by electro-magnetic means as he did mechanically. It simplifies the problem greatly, because if you zeroize the hands at each hour the indicated error becomes the rate. Take, for instance, the cam A of fig. 24 and divide it into two insulated halves as a commutator with two segments A A_1, connected respectively with a raising or accelerating magnet B and a lowering or slowing magnet B_1. The synchronizing lever is a conductor from battery, and if it habitually finds the cam slow it will operate the raising magnet, which will wind up the capstan by means of an ordinary electrical impulse dial movement, whereas if it finds the cam fast it will lower it. There is little use in making the correction proportionate to the error; it will soon find zero and keep it. Give it a small correction constant and let it work off the rate at its leisure.

On the assumption of course that it is worth doing, which I doubt, it could only interest the proprietors of a wiring network and the providers of a public service, as they alone could make any extensive use of it. There is but one such company in England, and the demand for their commodity is fading in the light of wireless time signals and automatic telephone time transmission. They did not adopt it, and I recommend inventors to turn their attention to more remunerative channels, and then to ask themselves two elementary questions: Is it original? and Is it wanted?

Of course automatic selective wireless receiving devices may become sufficiently simple and reliable to provide synchronizing signals. Many have found it an interesting pastime to devise a wireless set which shall reject everything except the six dot seconds, building up a cumulative effect enabling the last dot to create a synchronizing signal, just as on board ship the S O S has been made to ring an alarm bell when "Sparks" is off duty. Thousands of ships have been so equipped—in fact, it is compulsory in the British Mercantile Marine when the wireless is unattended—but that is a matter of human safety, and it has not been considered worth while as a method of synchronizing clocks, though its possibility has been proved.

The correction of clocks from daily or hourly signals is so little wanted in these days that the methods we have discussed are mainly of historical and intellectual interest, but other demands for synchronization have arisen. It can help the astronomer to obtain mean time from his sidereal standard clock; it can time the frequency of electric light generating stations, and enable them in turn to apply it to circuits of electrical impulse dials; and above all it assists a free pendulum to impose its timekeeping upon a slave clock so that the latter can perform the escapement function for it. But we cannot usefully discuss these special feats of synchronization until we have described in later chapters the instruments to which they are applied.

CHAPTER VI

SPEED CONTROL OF ROTARY MOTORS FROM PENDULUMS

THIS subject is so nearly akin to synchronization that we must find space to discuss it here.

It may of course be said that every electrically maintained or self-wound clock is in itself a controlled electro-motor, since rotary motion is always present, albeit checked and regulated by a pendulum through its escapement; but the idea underlying the title of this chapter is that the motor is primarily a source of considerable power which may be applied to any utilitarian purpose and not merely that of keeping the clock going.

Take for instance the "Hipp" driven pendulum as described and illustrated on page 60, fig. 37, chapter VIII.

At first sight it does not look much like a motor. Its pendulum, however, suggests a flywheel in that it has the properties of inertia and momentum and can store energy, but its speed is dependent solely upon its length and has nothing to do with the power applied to or stored in it.

Nevertheless it is an electro-motor which has the peculiar property, that while its speed is constant it gives us great efficiency at very low speed, which is exactly what a clock wants. It can be used for the largest turret clock equally as well as the little mantelshelf clock for which Hipp designed it. It can run under the control of its own pendulum as in fig. 37, or, if desired, its speed can be controlled by an outside source such as the half-minute impulses of an electrical impulse dial installation as in fig. 25, which illustrates Messrs. Gent's "waiting train" method of 1907.

The pendulum B (fig. 25) gathers one tooth of the count-wheel at each swing until the pin F2 comes round and lifts the lever K.K1 into the position shown and masks the tooth next to be gathered. As K.K1 is retained in this position by the catch M1, gathering ceases until the next half-minute impulse through magnet N lifts M1, frees K.K1, and unmasks the blanked tooth, when of course gathering recommences and continues until F2 comes round again, and the above procedure is repeated. As a method of synchronization by means of a checked gaining rate this device reminds us of Ritchie, fig. 16, and of Puttkamer.

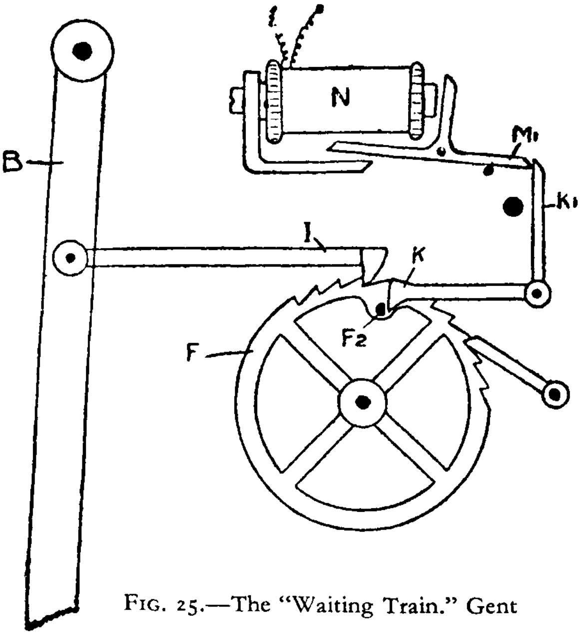

Fig. 25.—The "Waiting Train." Gent

In 1921 Mr. Alexander Steuart of Edinburgh hit upon an ingenious plan for using a rotary motor to reset a gravity arm of a pendulum, thereby enabling the pendulum to control the motor's speed. Fig. 26 is taken from his Patent no. 202139 and shows how the gravity arm, after driving the pendulum, falls on the right-hand stop and short-circuits the resistance of a continuously running motor, thereby quickening it for a period, the beginning of which is dictated by the pendulum and the end of which is limited by the motor itself in the act of replacing the gravity arm by a geared cam.

It is a delightful method of putting a continuously running motor under the direct control of a pendulum. Its power is unlimited, it is silent in action, and its uses are obvious. It should replace the conical pendulum wherever continuous motion is required, as in chronographs and telescopes, if something more accurate than a mains-driven A.C. synchronous motor is desired.

There is no transmission of energy through the Steuart contact but, since it is only called upon to short-circuit a resistance, it is probably good enough.

Although intended by the inventor as a means of resetting a gravity arm in order to keep a clock going, it has, in the writer's opinion, a much better chance of justifying itself as a means of keeping a motor running at a constant speed under the dictation of a pendulum.

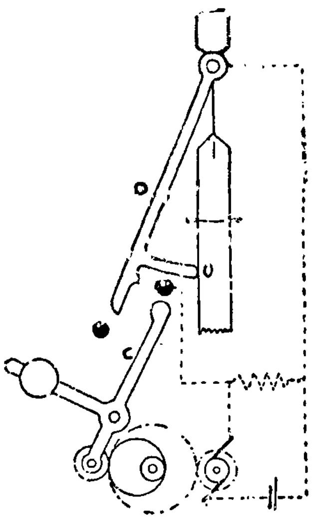

FIG. 26.—Pendulum-controlled motor. Steuart

But the story of motor control by half-minute impulses begins with my chaser switch illustrated in fig. 27, taken from patent no. 1587 of 1895. The arm A, mounted concentrically with the impulse wheel of an electrical impulse dial movement of half-minute periodicity, is normally held against stop B or against the contact pillar D on the large wheel E by a spiral spring C. This latter completes the circuit of a power supply through the rotary motor M until the large wheel E has gained sufficiently on the dial movement to cause a break between D and A. D will cease to advance until it has been caught up by A, when the whole procedure is repeated. A thus continually chases D. If the power supply is cut off, then the dial movement stores its half-minute pulses in spring C and on restoration of the supply the rotary motor has an uninterrupted run until it has restored the turret clock hands to true time.

Fig. 28 shows the substitution of a rheostat for the contact pillar D. The analogy between this and the control of the pendulum motor in fig. 26 will be obvious, the masking of the gathering pawl being the mechanical equivalent of the switching at D.

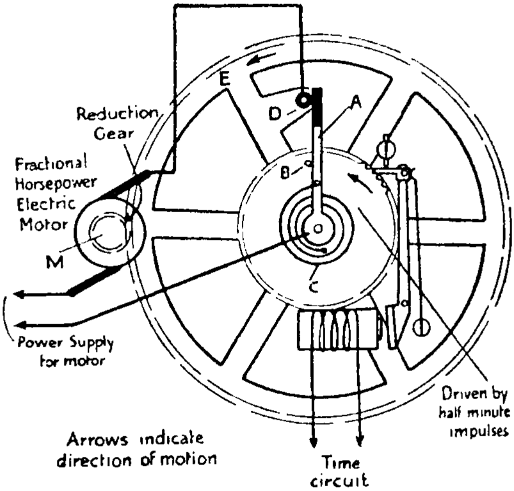

FIG. 27.—Chaser switch. Hope-Jones

The late Mr. A. G. Jackson of Brisbane, since the beginning of this century, preferred a fixed switch instead of a rotating one, and his method, which is to be seen in many turret clocks in Australia, notably in the Brisbane Town Hall, is illustrated in fig. 29. The arm is on a half-minute wheel of the motor train and in snapping switch D opens the circuit at B until restored by the next half-minute impulse, the overrun having in the meantime allowed D to close again.

The Gerrish method of driving telescopes as used in many observatories is practically identical in principle, but seconds are used instead of half-minutes.

Alternatively a differential motion may be used to provide the necessary correction as in the "mouse-feed" of the late Sir Howard Grubb. Most of the telescopes in the world's observatories are still provided with weight-driven turret-clock movements synchronized by one of these methods from a special sidereal clock in the dome with seconds pendulum, but they are gradually giving place to small electro-motors directly coupled to the motion wheels of the telescope.

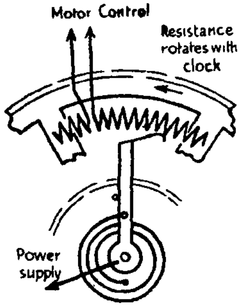

FIG. 28.—Chaser switch with rheostat

One would have thought that to hold a telescope rigidly on to an object in its field in spite of the earth's rotation by a mean time clock would demand a precise ratio between mean solar and sidereal time expressed in the numbering of the teeth of a set of wheels and pinions.

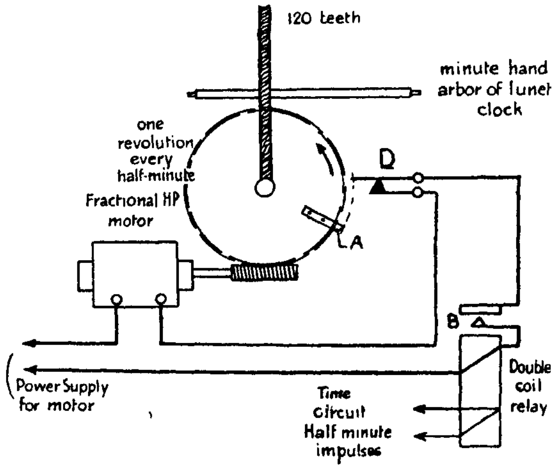

FIG. 29.—Motor control. Jackson, Brisbane

Investigating these ratios in 1936, I compiled a list of "possibles," beginning with the simplest, $\frac{30 \times 61}{25 \times 73} = \frac{366}{365}$

with an error of 57·3 sec. per annum and quoting all those known since Margetts produced one in 1799 correct to two seconds per annum, and Vines in 1836 made the clock now in the Science Museum at South Kensington, with a separate sidereal dial which will take more than five years to get one second out. To these Dr. Comrie, the former Director of the *Nautical Almanac*, added one which appears to be perfect, i.e., $\frac{45}{29} \times \frac{71}{151} \times \frac{257}{187} = 1{\cdot}002{,}737{,}909{,}297$, This is the actual value of the ratio required in 1955 so far as it can at present be calculated. The full story of this interesting mathematical feat appeared in the scientific journals of that year (1936) and reprinted in the June 1937 issue of the *British Horological Journal*, but space will not permit of its reproduction here.

A precise ratio is not, however, a real necessity for telescope motion, since refraction, particularly at the lower angles, has to be allowed for, apart from which every observatory has an accurate sidereal clock as the first fundamental requirement of its equipment and may be assumed to have sidereal time "on tap" electrically whenever required. The reasons why it is never so used are interesting, but the temptation to discuss them must be resisted. Considerations of space will not even permit me to describe ingenious methods of synchronizing a mean time clock from a sidereal and vice-versa, based upon the coincidence which occurs every 6 minutes between every 365¼ mean time beat and the 366¼ sidereal beat, but a full account of them may be found in the issue of June 1938 of the *Watch and Clock Maker.*

In those countries where a genuine effort is made to keep the periodicity of the electric light supply correct an A.C. synchronous motor with gearing designed to give approximate sidereal speed is near enough for normal running, as the astronomer is always given facilities for manual adjustment. The latest development of this form of telescope drive is due to Professor McMath of Lake Angelus, Michigan, and Mr. W. A. Grieg. It has been adopted by Dr. H. M. Jeffers at the Lick Observatory, California, whose ingenuity has given the observer a delicate rate control from the eyepiece end of their Crossley 3 ft. reflector. The primary source of the alternating current for driving the telescope is a vacuum-tube oscillator whose frequency is determined by the capacity and induction of a tuned circuit, either of which may be varied. After suitable amplification it easily drives such of the old turret clock gear as is retained. A double-pole switch is provided to enable the electric light supply to be substituted, and it has been found that even then the drive was considerably better than that provided by the old mechanical clock, though not so good as that of the tuned vacuum tube oscillator.

A similar method, much simplified, has been devised by Mr. H. W. Cox of Mitcham, Surrey. A typical installation which may be described as a radio set on the lower end of the telescope uses a synchronous gramophone motor of 15 watts to drive a telescope, the total moving weight of which is about 700 lb.

It is so obvious that the future of telescope driving lies with apparatus of this kind that it is desirable to include it in this chapter, though it has nothing to do with electric pendulum clocks. We may indulge in dreams of such a driving system being automatically controlled by the stars themselves focused upon photo-electric cells, and of wireless valve oscillating circuits rivalling a quartz crystal in accuracy of time measurement. At present we are concerned only with the fact that it is quite good enough for short-period telescope driving, and better than the mechanical turret clocks now generally in use.

After this justifiable digression we return to the use of a pendulum to control the speed of a rotary motor. We have seen that we can produce A.C. of any desired frequency ourselves; that we can set up our own home generating station and run a motor from it at any speed, varying that speed by varying the frequency. The prime source of time-keeping may be a quartz crystal, which with due precautions can achieve great accuracy, a tuning fork, a buzzer, or a valve oscillator which is good enough for telescope driving.

But our business in this chapter is to see how the speed of motors can be controlled from a clock with a seconds pendulum, and we conclude this chapter with a description of the ingenious method incorporated by the engineers of the British Post Office in their "talking clock."

In 1921 there was inaugurated in Paris a service of automatic time transmissions in response to telephone calls. The idea was as old as the phonograph and could have been realized with the aid of the radio gramophone, but we waited for the sound film which removed all difficulties. The research department of H.M. Post Office at Dollis Hill, N.W., developed it on these lines and instituted automatic telephone time service in London in 1936.

Any telephone subscriber, after he has asked for the time or dialled TIM gets it immediately in the following form: "At the third stroke it will be 11.17 and 40 sec. . . . pip . . . pip . . . pip." In a cinematograph film speech appears in transparent wave-forms on its edge. TIM's messages, however, are recorded on glass discs maintained in continuous rotation, and the first necessity is that the discs shall rotate in exact conformity with Greenwich mean time. Some form of synchronization from a free pendulum was obviously indicated, but nothing so commonplace was good enough for Dr. Speaight. With bold originality he uses a free pendulum to generate an alternating current of very slow periodicity and drives the discs with a synchronous motor. A hundred years ago the only conceivable method of doing this was that adopted by Sir Charles Wheatstone, and it will be remembered how in Chapter III I said some sarcastic things about the timekeeping that would result from driving a pendulum bob through a bath of treacle or a magnetic field! But Dr. Speaight merely uses his free pendulum to "scan" a transparent trace of a sine-wave placed at its foot, of which the outline is shown in fig. 30. A beam of light falling upon it is revealed or screened, as the pendulum swings, on its way to a photo-electric cell. It will be observed that the wave outline is "crushed up" at the ends so that in spite of its varying speeds in different parts of the path of the pendulum as it "scans" them, a perfectly uniform sine-wave will result from the passage of the pendulum and its transparent "light slot" at each swing. The impulses from the photo-electric cell are then amplified by means of a series of thermionic valves resulting in an alternating current of very slow periodicity timed with great accuracy and capable of driving a motor directly coupled to the glass programme discs.

The success of the system and the public demand for it has exceeded all expectations and has added nearly £100,000 a year to the gross revenue of the Post Office. Of course this is not all profit, but TIM calls are much more remunerative than conversations because they only last one-fifth as long, and moreover they are mostly made when ordinary telephone business is slack. Within two years of its inauguration in London it was extended to Manchester, Edinburgh, and Glasgow. It is intended to provide the service throughout the rest of the country, beginning with Birmingham, Bristol, and Leeds.

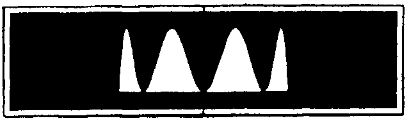

FIG. 30.—TIM'S pendulum scans this and produces A.C.

CHAPTER VII

INDEPENDENT SELF-CONTAINED ELECTRIC CLOCKS

FOLLOWING Bain's classification on page 6 we have now to deal with independent clocks whose motive power is electricity.

For nearly a century the idea of making clocks go without having to wind them up has attracted hundreds of inventors who set themselves the apparently easy task of arranging a contact on one of the wheels of the clock to control an electro-magnet which shall store a little power in spring or weight sufficient to keep it going until the action repeats itself. There are people who still think it original, though it has been done in almost every conceivable manner. Electric clocks of this class, even if reliable and successful, which few of them are, have the "defect of their merit"; the merit is that they require no winding, with the inevitable result that their correction is neglected and they are left to follow their own sweet wills, gaining or losing in adjacent rooms until they look foolish.

Electricity has a much greater service to render to horology than that of merely winding up its clocks, and I look upon much of the effort spent in this direction as misplaced ingenuity. I have heaped ridicule on consulting engineers who specified them for use throughout large institutions, and I have also spoken of the subtle fascination they possess for the worst type of inventor, the perpetual motion crank, who has filled the patent files with rubbish and brought electric clocks into disrepute.

So there need be no regrets that their day is done and that their sun has set, or rather has been eclipsed by the synchronous motor clocks available wherever there is an electric light supply by alternating current, time-controlled.

It may be asked, Why say anything more about them if they are already obsolete or doomed? The answer is that there is no limit to the folly of the inventor, and that since he *will* go on producing inventions that will not work, and would not be wanted if they did, we ought not to leave him to flounder in ignorance, but should let the failures teach him how not to do it and show him some important principles enshrined in the successes.

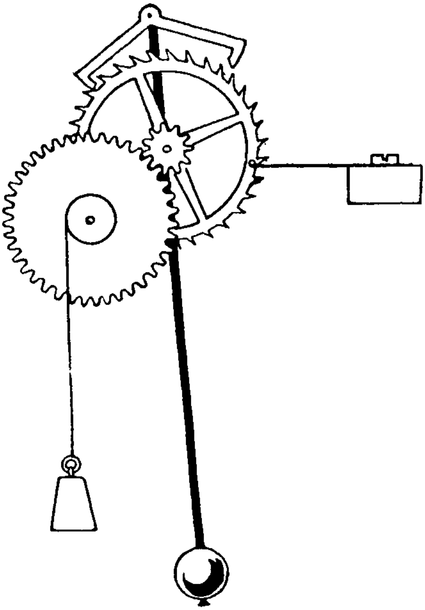

FIG. 31.—Simple-mindedness

A selection of them should be arranged, for the sake of clearness, in a sequence of natural evolution to show the advance from the crude to the refined and the survival of the fittest. Where this coincides with the order in which they were actually produced it must be attributed to accident, for as mentioned before, in spite of the publicity afforded by patents, technical journals, and the proceedings of learned societies, the ignorance of most inventors of the work of their predecessors is profound.

Fig. 31 illustrates the escapement of an ordinary clock, weight-driven, as shown, or spring-driven. A pin on the 'scape wheel makes contact with a spring at each revolution to control an electro-magnet or motor, not shown, to raise the weight or rewind the spring. The "make" will be slow, the duration will be difficult to be determined precisely, and if the spring is adjusted to a satisfactory tension it may stop the clock, while if it is light the contact will be unreliable.

It serves to illustrate the first step of the childlike mind that is typical of the average inventor of electric clocks and to illuminate the rock on which they mostly split. They are between the devil of a stopped clock and the deep sea of a failing contact, since the whole of the energy for making contact is robbed from the wheelwork.

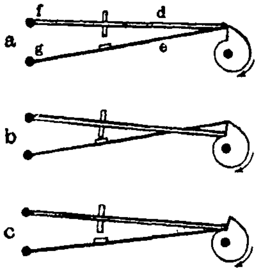

Fig. 32.—Arzberger's contact

If one *must* make a contact from the gently moving wheels of a clock—and there are occasions where and when circumstances demand it—let us follow the example of Professor Arzberger of Brünn, who devised in 1870 the cam and two levers, one longer than the other, illustrated in fig. 32. They are lettered *d* and *e*, *e* being the longer, pivoted at *f* and *g*, with their free ends lying side by side on the cam, and are shown in three positions: just before making contact (a), in contact (b), and just after the break (c). This arrangement provides a quick make and break, and the duration of the contact is exactly determined by the difference in length of the two arms and the speed of rotation of the cam. It also equalizes the friction on the train; but the principle is the same, the whole of the energy devoted to the purpose of the contact being obtained from the wheelwork.

The self-winding clock of Chester H. Pond of Brooklyn, New York, contained a little rotary motor which wound up a spring in response to a contact made by the centre wheel every hour. An attempt to introduce this into England in 1886 met with small success; but the Self-Winding Clock Company of New York has since adopted an improved pattern in which the motor takes the form of a vibrating bell-hammer with pawl and ratchet, operating at more frequent intervals.

In the clock of Victor Reclûs of Paris the periodic contact is obtained by the action of cams on springs, as shown in fig. 33. The cams are mounted on one of the rotating arbors of the clock train and are normally engaged in pressing aside the two springs A and B. The spring A falls off first and makes contact; the spring B falls off a second or two later and breaks it.

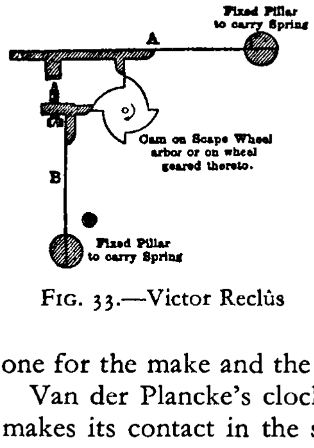

FIG. 33.—Victor Reclûs

The contacts in the self-wound clock of David Perret of Neuchâtel are also obtained by springs deflected by wheelwork. In this case the centre wheel operates two contacts in series, one for the make and the other for the break.

Van der Plancke's clock, of La Précision Cie of Brussels, makes its contact in the same way, and the armature of its magnet is shaped like a small hammer adapted to hit a pin on a weighted flywheel, thereby kicking it round one revolution and storing energy in a spring.

Many more examples could be named with contacts working on the same principle, but the above will suffice for the purpose of illustration.

Some source of considerable power, other than the wheelwork of the clock, was clearly desirable for the making of contacts. It became obvious that the armature of the electromagnet provided for the rewinding of the spring or weight might be used to reinforce the contact by increasing the rub or pressure upon the contact surfaces. The uniformity of the going power is not seriously disturbed if the armature devotes some of its energy to contact purposes and stores what remains in the spring or weight.

Möller of Berlin (patent no. 10960 of 1901) and A. B. Webber of the Standard Time Company Ltd. (patent no. 8094 of 1902) achieved this reinforcement of the contact by means of a spring and an inclined plane.

Self-wound clocks by T. J. Murday, F. A. Chandler, and S. Palmer are similar in principle, but with every variety of constructional detail. Dr. Aron's self-winding action, which has been applied more to electricity meters than to clocks, also derives its contact-making energy from the moving armature, but it is sufficiently distinctive to justify illustration in fig. 34, in which the driving click A, mounted on the armature B, drives the main wheel of the clock by means of the spring C. The carrier D, with insulated blade E and contact blade F, is adapted to be flung in one direction by the spring G when the pin H on the armature has moved it past the dead centre. The self-wound clock of Hennequin of Compiègne is similar in principle.

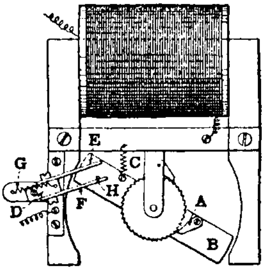

Fig. 34.—Dr. Aron's "Kippe"

The above review of self-wound clocks is far from complete, and we must refer the reader to the first edition of this work for illustrated description of them and of others which are quite dead and do not merit resuscitation.

It will be noticed that while the above constitute a distinct advance, the contact-making still requires a certain amount of work to be done by the wheelwork or, which amounts to the same thing, by the spring or weight that is driving it, with consequent variation of the power applied to the escapement.

In 1895, in association with Mr. G. B. Bowell, I pointed out in a lecture before the British Horological Institute that it was unnecessary for the wheelwork or its driving power to take *any* share in the work of contact-making, and described a method by which the whole of the energy required to keep the clock going could be actually passed through the contacting surfaces. This arrangement is shown in fig. 35. The weighted lever A turns the wheelwork, descending as it does so until the vertical arm reaches the contact screw in the armature E and the circuit is closed. Magnet G then attracts the armature and the thrust of the contact screw replaces the weight by throwing it up, the break being caused by the momentum of the lever, the inertia of which is intentionally increased. Though this system appears to be the logical result of progress upon the lines I have indicated and finally disposes of the difficulty of obtaining a reliable contact without the least interference with the timekeeping properties of a clock, it was actually published before several of those I have named, owing no doubt to the isolation of individual inventors.

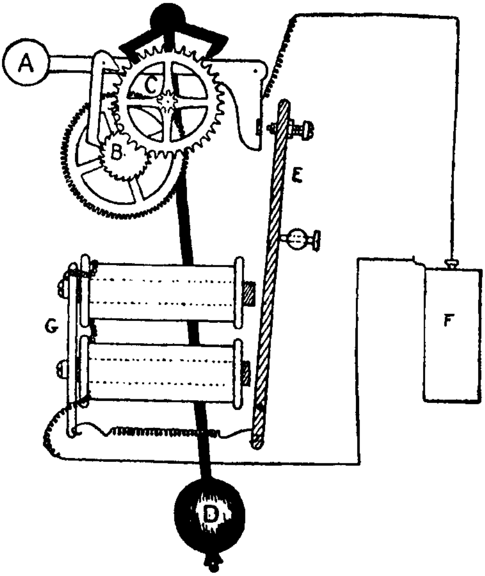

FIG. 35.—The Synchronome switch in its earliest form

The main object of the device as I presented it in 1895 was to serve as a master clock to transmit electrical impulses every half-minute for the operation of circuits of step by step dials, and in the decade that followed it held the field in England and ousted such half-hearted attempts as had been made to exploit several continental systems. In 1905 it was radically improved, as we shall see later on.

I have often been asked for the derivation of the trade name "Synchronome" under which the system was launched. It is derived from the three Greek words—*syn*, with; *chronos*, time; *nomos*, law; *συν–χρόνου νομω*, i.e. in accordance with the law of time. These three words are run together, thus:

συν-χρόνομ(ϵ)
SYNCHRONOME

and this incidentally reveals the origin of the verb *to synchronize*.

A little knowledge is a dangerous thing. A limited company subsequently based its name upon a word closely resembling it, but with the root CHROM instead of CHRON, imagining that it still indicated timekeeping, or clocks, or synchronizing, or something of that kind, whereas of course it could suggest only *colour*. Such floundering among Greek derivations would be merely ludicrous if it were not harmful to the unlettered and apt to confuse the unthinking by its apparent similarity. It reminds one of the schoolboy's howler —the marriage custom of the ancient Greeks was that every man had but one wife, and they called it MONOTONY!

At this date, forty-four years after its introduction, it is interesting to recall what little notice was taken of the first Synchronome invention. It was universally ignored, with one conspicuous and creditable exception. When my German patent ran out through non-payment of taxes—which was never a matter of regret—Riefler of Munich adopted it in his famous clock as an automatic remontoire for his Graham dead-beat escapement, which imparted impulses to the pendulum by rocking the top chops of his suspension spring.[1]

---

[1] Professor R. A. Sampson, the then Astronomer Royal for Scotland, published a masterly analysis of Riefler's impulse in the *Proceedings of the Royal Society of Edinburgh*, vol. xxxviii—Part 1—(No. 11) 1917/8.

The principle involved—the transmission of energy through the surfaces of the contact—was a fundamental one, as also was the use of self-induction to dictate the duration of the contact, which will be explained later on, and I acclaimed them as such, but they commanded little attention at the time, and even now they are not realized on the Continent or in America; yet they are at the root of the whole matter, and the breaking of the world's records for accuracy of time measurement in 1923 and 1924 at Greenwich and other observatories by the Synchronome free pendulum designed by Mr. Shortt is based upon them. They are the first of a series of principles on which an industry has been founded.

We cannot leave the subject of self-wound clocks without reference to Huyghen's endless chain, and the happy way in which it can be used to harness an electro-motor to a turret clock. Any mechanical turret clock may be relieved of its heavy driving weights, the tedious winding of its long wire ropes, and the attendant risks by the simple method illustrated in fig. 36. All that is wanted is some bicycle gear and sprocket wheels and a cycle chain supporting a comparatively small weight. The winding barrel and great wheel are dispensed with, and the chain is applied to wheel A next, or next but one, to the escape wheel B. The weight C itself operates the snap switch D on its rise and fall, thereby calling upon the electro-motor to wind it up by the wheel E whenever required, the torque on the going train being uniform and continuous. The jockey pulley and weight F required to keep the chain taut may be used instead of the main weight to operate the switch, which should preferably be a mercury contact in a sealed glass tube.

In one such application a weight of 60 lb. falling 17 in. (85 ft.-lb. storage) was successfully substituted for a 240-lb. weight falling 60 ft. (14,400 ft.-lb. storage).

Visiting famous turret clocks and carillons was always a hobby of mine, and I never climbed the belfry of Bruges without sympathizing with the clock-winders and wishing to relieve them of their monotonous task. I recommended the adoption of this method for self-winding the Westminster clock in the days when it was still a day's work for two men

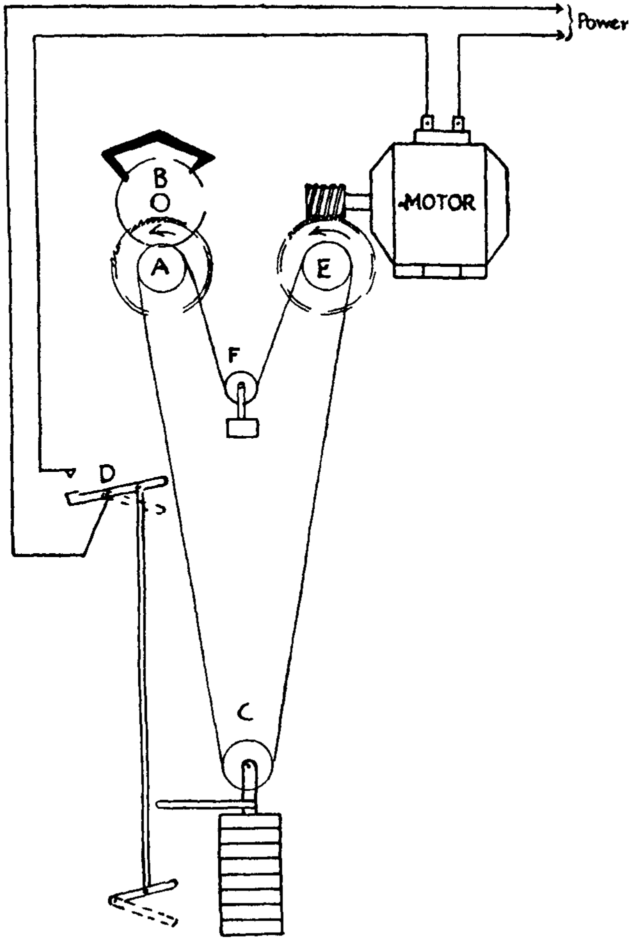

FIG. 36.—Huyghen's endless chain with electro-motor

twice a week, but H.M. Office of Works were apathetic. Both these clocks have since been provided with electro-motors switched on and off by hand, merely to replace men, whereas they might also have replaced mechanism, improving the clocks as timekeepers and making them automatic. A proper reverence for the work of Lord Grimthorpe possibly prompted the least possible alteration, but there is not a turret clock in this country whose performance would not be improved by this treatment.

There is now a prospect of this clever device, which we have always admired in "wag-at-the-wall" and cuckoo clocks, coming into its own and taking on responsible and dignified duty as a turret clock power unit.

The introduction of synchronous motor clocks deriving their power and their time from the electric light supply has at last taught the public that electric clocks exist. Unfortunately they seem to know little more than that basic fact, and accept what they see as being the only kinds that there are. Even architects and consulting engineers specify synchronous motors for turret clocks regardless of the risk of stoppages due to failure of the electric light supply. We shall read more on this subject in a later chapter; in the meantime, suffice it to say that the use of Huyghen's endless chain in the control of a time circuit of electrical impulse dials electro-magnetically released every half-minute gives immunity from stoppage and better timekeeping.

And we shall see in chapter XXIV its gift of a "differential" in a frequency checking clock.

CHAPTER VIII

HIPP AND OTHER PENDULUM-PROPELLED CLOCKS

IN the last chapter I trounced a mob of law-breakers who robbed the wheelwork of their clocks of energy required to make contact and showed that it was unnecessary to do so. I hope later on to show how lavishly Nature rewards those who walk in the strait and narrow way of obedience to her laws and to give you some examples of her generosity. I believe she is always waiting round the corner to bestow unexpected benefits on those who refuse to do something that they know to be scientifically wrong and will not be content with a substitute if it transgresses a principle.

But one cannot speak of merit in electric clock inventions without giving pride of place to the Hipp "Butterfly" escapement which is illustrated in fig. 37. An apparently free pendulum has an armature attached to its lower end immediately above an electro-magnet fixed to the case. At its centre the pendulum carries a little freely swinging pallet. This pallet trails backwards and forwards over a notched block mounted on the end of the upper spring of a pair of contact springs until, as a result of the gradually decreasing arc, it fails to fall off the block. On the return swing the point of the pallet enters the notch and forces the top spring vigorously into contact with the lower. The armature carried at the bottom of the pendulum is strongly attached by the fixed electro-magnet; the arc immediately increases and normal trailing of the pallet restored.

It is quite true that the energy required to make contact is taken from the pendulum, but this is only occasionally at wide intervals of time, and it occurs when the pendulum is passing through its zero position, when its kinetic energy is at its greatest and the interference is comparatively innocuous.

Looked upon simply as a method of converting electrical energy into rotary motion, this is probably as efficient a motor as was ever designed. There is no theoretical limit to the amount of power that may be developed by this means.

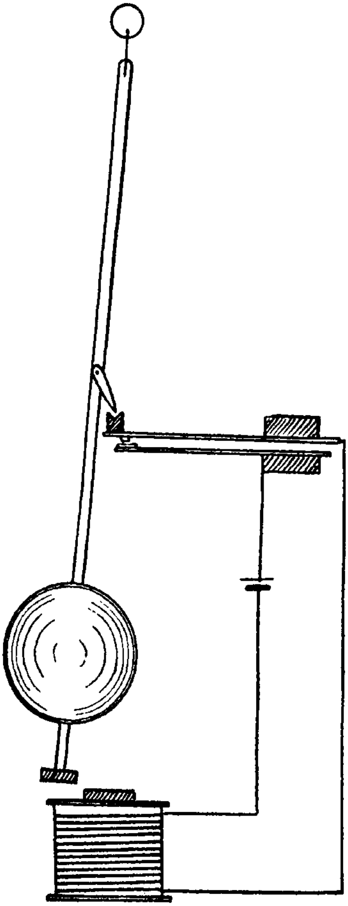

FIG. 37.—The Hipp "Butterfly" escapement

It can be used as readily for large turret clocks as for domestic clocks. It helps itself to whatever current its load requires and has been effectively used to drive turret clocks by Gent & Co. of Leicester, who applied it to a half-minute control under the title of the "waiting train" in 1907, as described in chapter VI, see fig. 25.

Observe that, though fluctuations of battery power vary the value of the impulse, nevertheless the frequency of the impulses is increased automatically and in exact proportion to their lack of strength; hence the average arc is reasonably constant.

A further outstanding merit of the invention is the comparative freedom of the pendulum, due to the wide intervals at which contact and impulses take place. Add to this the concentration at zero of such interference as exists, and you get such a good timekeeper that it was actually tried out in observatories for precision purposes.

Dr. Hirsch had one under his care in the Neuchâtel Observatory from 1884 to 1890 and quoted its mean variation of rate in that period as ± 0·03 sec., saying that it approached the limit of the instrumental precision of the means by which time itself was then being determined.

We are, however, bound to conclude that it did not quite justify itself in this lofty sphere, since it failed to supplant Riefler in the observatories of the world. Nevertheless its performance was good enough to give us "furiously to think" about the *real* virtue that enabled it to surpass the achievements of the best Graham dead-beat escapements ever made in England, viz. *the freedom of the pendulum.*

Matthaus Hipp was born in 1813 and died at the ripe old age of eighty in 1893. Favarger, in his book on the applications of electricity to time measurement (new edition, Neuchâtel, 1924), says he conceived the idea as early as 1834, which, if true, is a remarkable instance of a young man's early appreciation of the uses of an electro-magnet. He was then only twenty-one, having entered the profession of clockmaker at Saint-Gall in Switzerland. It was not until 1842, when he was established as a clockmaker at Reutlingen in Würtemberg, that he actually produced the invention destined to associate his name with electric clocks for all time. Without doubt his was the one and only achievement that has survived in what we may conveniently call the Victorian era. His invention was thus contemporary with Wheatstone and Bain, but I doubt whether they ever heard of it. Its first appearance here was in the British patent no. 1518 of 1865, as a communication from J. T. Scholte of Paris. In this patent the dial motion wheels are driven by a one-sided crutch through a worm gear, an excellent method frequently repeated without acknowledgment. But for that matter the Hipp "toggle" itself has been unblushingly reinvented a dozen times.

It is suggested that the term "Butterfly" escapement originated with one such invention, viz. that of Lemoine of Paris (British patent no. 5051 of 1880), who used air resistance rather than gravity for his toggle by means of a long, lightly pivoted vane terminating in a sail of paper or mica, as shown in fig. 38.

The only part of a pig that a Chicago pork packer cannot use is the squeal; the only part of Lemoine's invention which *has* been used is the word "Butterfly"; and I prefer the term Hipp's "Butterfly" escapement to Hipp's *horloge à palette et contre-palette*, which is its accepted title abroad.

Messrs. Peyer, Favarger & Co., the original manufacturers and successors to the business founded by Dr. Hipp in 1860, and the Telegraph Manufacturing Company of Neuchâtel have made a large number of Hipp clocks, and they became very popular in their domestic form with a pendulum beating half-seconds, thanks to its simplicity, silence, small consumption of current, and the fact that any battery will keep the clock going until it is almost exhausted, and give a signal of the condition of the battery meanwhile; but even with these virtues and its good timekeeping it is no longer "on the market" as a self-contained clock in this country: so true is it that there is no serious and permanent demand for clocks that simply go without being wound up and retain their independence.

The Hipp "Butterfly" escapement is used in the master clock adopted by the British Post Office merely as a motor to keep its pendulum swinging, but there are some weighty objections to its use as a true master clock which we shall discuss in their proper place. Better methods have been introduced since, but the Post Office authorities find the Hipp "Butterfly" a simple and reliable means of keeping their pendulum swinging and, if they have failed to take advantage of recent developments and the merits of modern electric time service, which we shall shortly unfold, it must be attributed to the inertia of a Government department that, having established a standard pattern and practice, hesitates to make changes.

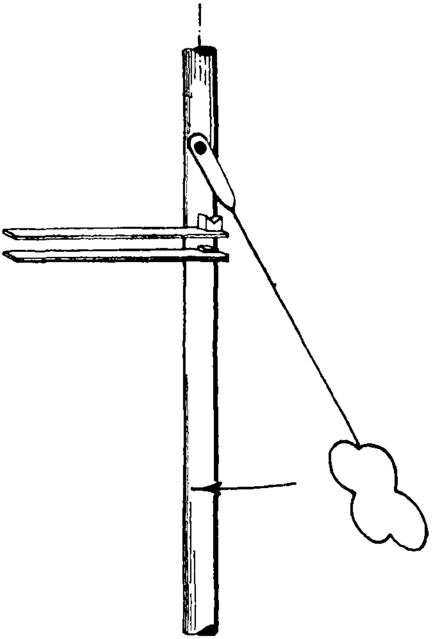

Fig. 38.—The origin of the name "Butterfly"

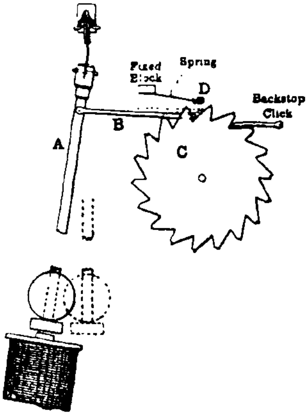

Fig. 39.—The notched **tooth** of Scott, Bradford

There are other methods by which the failing swing of a pendulum may be utilized to make contact, and one of these, devised by Herbert Scott of Bradford, appears to retain all the advantages of the Hipp form. In this clock, illustrated in fig. 39, a click B, carried by the pendulum A, gathers a ratchet wheel C, one tooth at each complete vibration, and has a contact D mounted on a spring fixed close above it. Normally the click falls to the root of the tooth gathered and rides clear of the contact but, when the arc of the pendulum has fallen a little, it catches in the shelf cut in the top of each tooth and consequently rides at a higher level and makes contact. But these clocks are no longer to be found. Like all independent clocks, however virtuous individually, they are independent and therefore emblems of selfishness instead of examples of teamwork in community service such as we expect from the electrically inspired.

Carrying on with independent electrically operated clocks according to Bain's classification, we will continue with that group whose distinctive feature is that they have electro-magnetic forces applied to the bobs of their pendulums, but without Hipp's saving grace of occasional impulse. They look similar, but they are as different as chalk from cheese.

We have always been accustomed to think of a clock as a storage of power in spring or weight expended through an escapement in keeping a pendulum swinging. In this group you see this process absolutely reversed. The power is applied at the other end of the machine; the pendulum is pulled backwards and forwards by an electro-magnet and propels the wheelwork as it swings.

We have always been accustomed to assess the merit of a clock by the skill with which the impulse is imparted to the pendulum and by the amount of the interference with its natural swing; in other words, we have judged it by its escapement and the quality of its workmanship.

In this group of clocks you see this theory and these considerations thrown to the winds. The pendulum is no longer treated as sacrosanct and left to swing freely under the dictates of gravity alone, but is pulled to and fro by impulses that cannot be ranked as constant, and the pendulum itself has to perform the duties of making contact and propelling the wheels and hands.

It is therefore obvious that this type of clock cannot possibly contribute to the science of accurate time measurement, but on a small scale with short pendulums and modest prices they have a market and go well enough for domestic use.

Alexander Bain's clock was the first of this kind, 1840–45 (see figs. 4 and 6 in chapter II). He fixed a coil on the lower end of the pendulum and permanent magnets adjacent to it in the case (or vice-versa), which in obedience to contacts made by the pendulum itself attracted it to and fro. The "motion work" of the ordinary clock is of course retained and, by means of a simple modification of the escapement, the pendulum drives it instead of the wheelwork driving the pendulum.

The duration of its contact varied inversely with the arc, but there seems to be some doubt whether he knew this or appreciated its value in auto-compensation; certainly he knew nothing of the use of induction for the purpose.

It would not occur to him that the pendulum in its swing set up a counter electro-motive force in restraint of the battery current, and that this would be useful in controlling the arc; but for that matter it did not appear to have occurred to anybody until it fell to me to explain it in the *Electrician* series of primers in 1914, when describing Frank Holden's clock, of which more anon.

In any case such questions as auto-control of arc could scarcely be considered in a clock in which such niceties are entirely submerged by irregularities caused by bad contacts and varying current.

As we saw in fig. 6, Bain's contact was merely a slide pushed backwards and forwards by the pendulum, with the result that the latter was subject to almost continuous magnetic interference *except* when passing through its zero position! The energy devoted to the contact was insufficient, its only source being the pendulum itself, and its faults reacted upon the pendulum at every swing through ragged and uncertain electrical impulses, with the not unnatural result that the invention disappeared long before the close of the nineteenth century.

The attempt of Bentley of Leicester to revive it between the years 1910 and 1913 seems to have met with no better

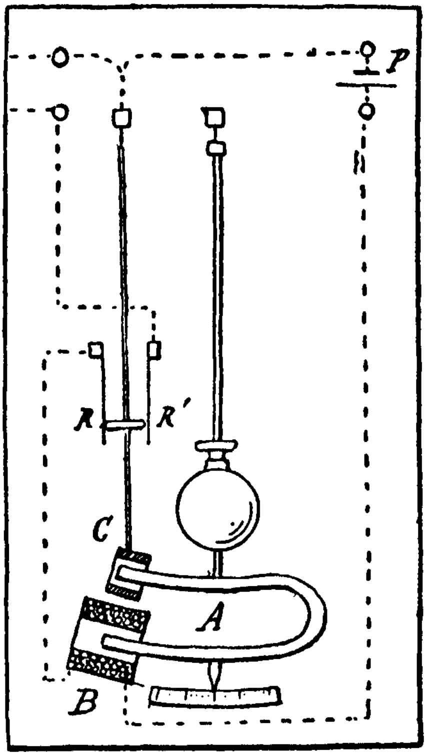

Fig. 40.—Féry's subsidiary pendulum for making contact

fate, in spite of some clever devices for the compensation of arc, and leaves one more convinced than ever that the real fault lies in the nature of the contact, the amount of energy devoted to it and the source of that energy.

Professor Charles Féry communicated to the Physical Society of France in 1908 the electricity-driven clock illustrated in our fig. 40. His main object was to produce a free pendulum, or, as he expressed it, one that touched no solid body during its oscillations. The upper pole of the permanent horseshoe magnet A attached to the bottom of the pendulum passed through the coil C forming the bob of a subsidiary pendulum, and inductively impelled it against the contact R, thereby momentarily closing a circuit from a battery through the coil B, with a resultant attraction of the lower pole of the horseshoe. The arrangement is an electrical paradox, because if the contacts affect the subsidiary pendulum they will also affect the work required to drive it, and therefore react on the main pendulum. Féry used a silver chloride cell and electro-magnets of very high resistance with a view to defying variations of contact resistance. His inventions have survived and are used by Brillié and LeRoy, but without the subsidiary pendulum for making contact. The "pendulette" of Brillié Frères has been described in chapter IV apropos of synchronization by the method of sympathetic pendulums.

In 1909 and 1910 Frank Holden produced a pendulum-driven clock which was like Professor Féry's in that it was applied to a half-seconds pendulum. His aim was to concentrate the electro-magnetic impulse upon the pendulum at zero and to leave it altogether free throughout the rest of its path.

Fig. 41 shows the cylindrical high-resistance coil A that constitutes his pendulum bob, and B the two horseshoe permanent magnets, the upper poles of which pass into it. Observe the pole pieces designed to concentrate the field at zero. The contact consists of a trailer C, which gives an impulse of short duration in each direction commencing just before and ending just after zero.

Thus all interferences due to contact-making and impulse are concentrated at zero, but unfortunately they take place every half-second; nevertheless the clock may be looked upon as a well-designed electro-motor of which the flywheel is the pendulum. It is useful to consider it as such in order to appreciate the effect of the counter electro-motive force set up by the movement of a coil in a magnetic field.

Let us assume for a moment that there are no mechanical losses; then the pendulum would swing permanently with an amplitude of such size that the E.M.F. generated by the coil passing through the magnetic field would be equal to that of the E.M.F. of the battery. It could not exceed that amplitude, for that would involve the pendulum giving up energy to the battery, and it could not be less than that amplitude, for that would involve the battery supplying

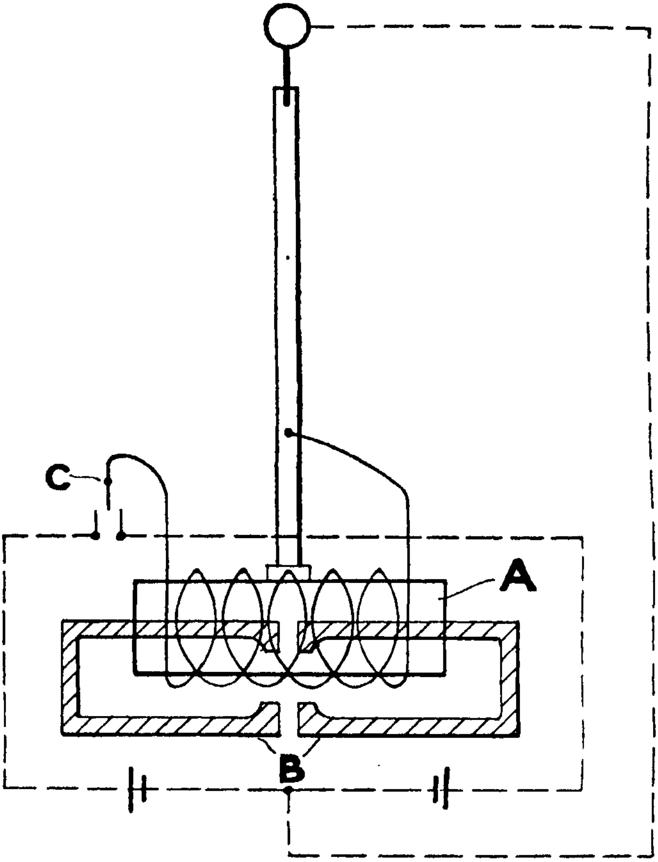

FIG. 41.—Half-seconds pendulum by Frank Holden

energy to the pendulum, which by hypothesis has no losses, and therefore would not require it. In the result the losses due to air and contact friction and the flexure of the spring are replaced by a very small consumption of current, and the arc is fairly constant, though of course it is primarily dependent upon the E.M.F. of the battery employed.

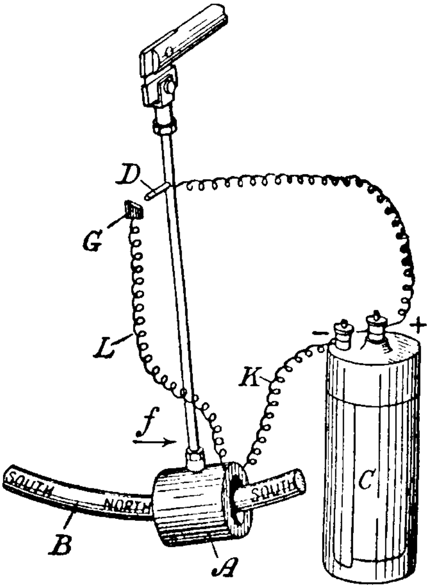

FIG. 42.—The Bulle clock

The Bulle clock is of a similar type, its original feature being the arrangement of the permanent magnet B with its north pole in the centre, as shown in fig. 42. The contact is indicated diagrammatically at DG, and it will be noticed that it is made in one direction only.

Favre-Bulle the designer does not appear to rely upon induction for arc compensation, as he has recently devised means whereby an abnormally large swing of the pendulum shall short-circuit the driving electro-magnet; such interferences with a pendulum can, however, hardly be commended.

The mere suggestion of a mechanical limitation of arc brings us back to the truth with which we opened our consideration of popular independent electric clocks, that as a class they make no serious contribution to the science of accurate measurement of time.

We have seen enough of this group of self-maintained independent electric clocks to realize that you cannot successfully apply electro-magnetism to the bob of a pendulum at every swing under the control of contacts made by the same pendulum without replacing the effect of counter electromotive forces set up, and unless you also realize that pendulums so propelled, particularly the shorter ones, are extraordinarily susceptible to varying contact resistance, varying battery and varying mechanical resistance in the work given them to do, any one of which will vary the arc in a most disconcerting manner.

On the other hand, we have had a convincing demonstration of the benefits that flow from leaving such a pendulum normally free, only giving it occasional electro-magnetic impulses. With the example of Hipp before us, in fig. 37, one wonders why "bob pulling at every swing" should be so persistently attempted, since it can have none of the merits that we referred to at the beginning of this chapter.

The current consumption of the Hipp pendulum is small and it automatically asks for exactly what is necessary for the job in hand. A single cell will keep it going until almost exhausted, and the pendulum will then exhibit a "battery warning" signal by increasing the frequency of its feed. It has the merits of extreme simplicity, silence and a constant average arc. Why have so many people gone out of their way to produce an apparently similar electric clock—identical in that its pendulum bob is pulled by an electromagnet and that the contact is made by the pendulum—yet containing no single one of these practical advantages and merits? Why did they throw over the first electric clock ever made, having an almost free pendulum, relieved of all interference except at widely spaced intervals, and those interferences (whether in contact-making or in receiving impulses) taking place at zero?

It is a question that ought to be answered, the more so because the egregious folly of it, or the stupidity or whatever your righteous indignation may call it, had its share in delaying the progress of the science of accurate time measurement for fifty years.

One answer is that ignorance of Nature's laws is always a prime cause of misguided ingenuity, and another is the egotism of inventors who merely want to be different and lack the humility involved in learning from their betters.

There is also a total lack of knowledge and discrimination on the part of the public. Unfortunately that ignorance is shared by the watch- and clock-making profession and by their assistants, who are taught only that a good salesman can sell anything. But that alone would not account for it. I blame most the teachers of technical horology. It is not merely that they could not or would not understand the virtues of this clock which has been before them for at least seventy years, but that in company with electric clocks generally, it was actually ruled out as a classroom subject for two generations!

The fact is that the professors had no interest in electric clocks. It is possible that they will cease to recognize their very existence now that synchronous motors have arrived, and that they will justify their attitude on the ground that no other kind will be wanted in future, forgetful that their business is the advancement of the science of horology, and that the only important improvements in precision of time measurement have been hammered out, not in the village smithy but in the electric forge. They have not even had the interest of the children to try to "catch the sparks that fly like chaff from the threshing floor."

CHAPTER IX

ELECTRICALLY RE-SET GRAVITY ESCAPEMENTS

Shepherd, Froment, Gill

We have had enough in the last chapter of independent self-contained clocks, kept going by making electro-magnets of their bobs and pulling and pushing them backwards and forwards. We examined half a dozen typical specimens, and saw how one of the earliest was by far the best, viz. Hipp's "Butterfly."

So we are free to turn our attention to electrically re-set gravity escapements. Our study of these will also take us right back to the early days, the first appearing in a patent of C. Shepherd, no. 12567 of 1849. Lord Grimthorpe describes the system in *Clocks, Watches, and Bells* in the following words:

"Shepherd's clock, by which it was announced that all the time of the 1851 exhibition was to be kept, seemed more promising, but they soon failed totally there, and the time was kept by Dent's large clock, made from my design, now at King's Cross. In them the electricity was employed to lift a small gravity arm at every alternate beat, which gave the impulse to the pendulum by falling on a pallet like the down-pallet of a dead escapement which had the advantage of giving a constant impulse when it gave any. But, unfortunately, it did not always lift." But we must not take Grimthorpe's criticisms too seriously, for he was no electrician and he completed his sentence thus:

"And anyone who sets to work to invent electrical clocks must start with this axiom, that every now and then the electricity will fail to lift anything, however small."

Grimthorpe just let it go at that without any investigation as to the root causes of the failures of electric clocks, and I took up the question exactly where and when he left it in 1895, determined to find the real causes and origin of these failures.

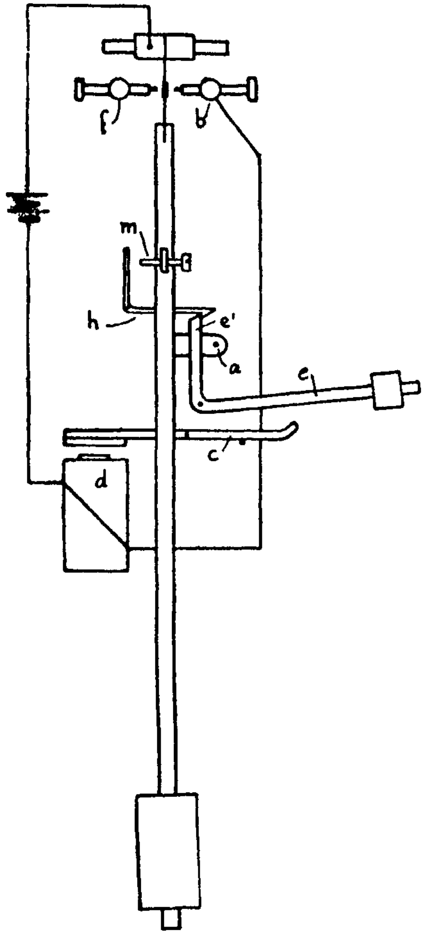

FIG. 43.—Shepherd's gravity escapement

Fig. 43 is a simplified diagram of Shepherd's clock. A right-angled gravity arm *e* is pivoted in front of the pendulum with its vertical arm e^1 normally held by the catch *h*. The pendulum carries a screw *m* which engages *h* and releases *e* as the pendulum swings to the left, the impulse pin *a* receives e^1 when released. At the end of the pendulum's excursion to the right the contact plate on the suspension spring touches the terminal *b*, which closes the circuit of magnet *d* and resets *e* by means of armature lever *c*. The companion contact *f* operates a circuit of electrical impulse dials.

Thus the pendulum has every kind of work to do and does it in the worst possible way. It charges into fixed contact points at the ends of its swing and unlatches its gravity arm in the same way, whilst the whole of the energy required to make contact is directly robbed from it.

Shepherd was established at 53 Leadenhall Street, but he lived at Hendon, where he secured the help of a wealthy and influential resident in Mr. J. F. Pawson, who had the system installed in his firm's warehouse at St. Paul's Churchyard (now Pawsons & Leafs Ltd.), where, however, it soon failed. But in the meantime, and within twelve months of filing his patent, Shepherd had the good fortune to secure the interest of a much more valuable patron in the then Astronomer Royal, Sir George Airy. He installed it, with some slight ameliorations, such as spring contacts, in Greenwich Observatory in 1850 as a master clock to operate a group of electrical impulse dials.

In his Autobiography, Sir George Airy refers to it under the year 1852:

"I established eight sympathetic clocks in the Royal Observatory, one of which, outside the entrance gate, had a large dial with Shepherd's name as patentee. Exception was taken to this by the solicitor of a Mr. Bain, who had busied himself about galvanic clocks. After much correspondence, I agreed to remove Shepherd's name till Bain had legally established his claim. This, however, was never done, and in 1853 Shepherd's name was restored."

Shepherd's famous clock has a 24-hour dial on the right of the main gate at the Observatory. His step-by-step movement is placed behind it on the other side of the wall, facing

THE MAIN ENTRANCE OF GREENWICH OBSERVATORY SHOWING THE DIAL OF SHEPHERD'S CLOCK

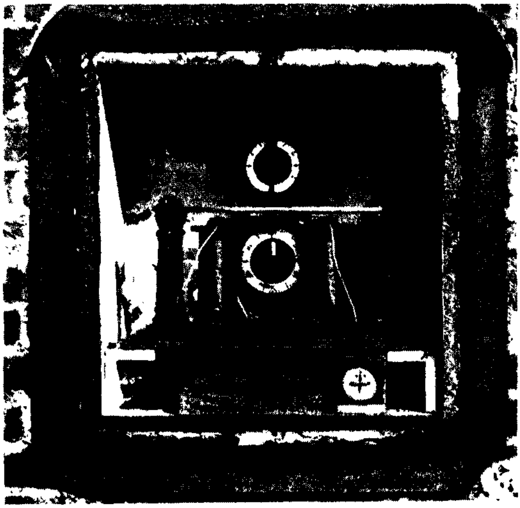

VIEW OF THE MOVEMENT OF SHEPHERD'S CLOCK

into the forecourt. This movement is almost as large as the dial, and is about the size of a modern 1-h.p. electro-motor. Its work would be done to-day by a movement no larger than the galvanometer at the lower corner on the right.

Some years ago the number of Shepherd's coils was halved and the diameter of those remaining has been reduced, but its general appearance is unaltered and it is still going, as he set it going in 1850, within a yard or two of that invisible line which the world knows as *longitude nought*, and of the great transit circle telescope which originates Greenwich mean time. It must shortly give place to modern methods; a nonogenarian deserves a rest, and let us hope it will find it in a national museum—some Westminster Abbey of pioneer inventions.

But this and the other electrical impulse dials in the same group have not been driven by their original master for many a long year. The inventor and Sir George Airy himself expected great things of it as a precision regulator; but if you will refer to fig. 43 again you will see how primitive and crude it is. It leaves us wondering how Airy, whose papers on pendulum mathematics and the theory of escapements have long since been recognized as classics, could have entertained any such hopes.

He failed to realize that the reliability of an electrical contact is mainly dependent upon the force expended in making it, and it did not occur to anyone at that date that that force could be obtained from anything but the pendulum itself.

So far as we have gone in our study of the applications of electricity to horology we have had no occasion to be puffed up over our achievements. Breguet proved himself our master in synchronization, and Hipp taught us how to make a clock with an electro-magnetically maintained pendulum.

Now, alas! we must cross the Channel again for a better electrically reset gravity escapement. In 1854 Froment devised the gravity electric escapement illustrated in fig. 44. The pendulum P is provided with a bracket carrying a contact screw C. It is driven by a gravity or spring arm B, which

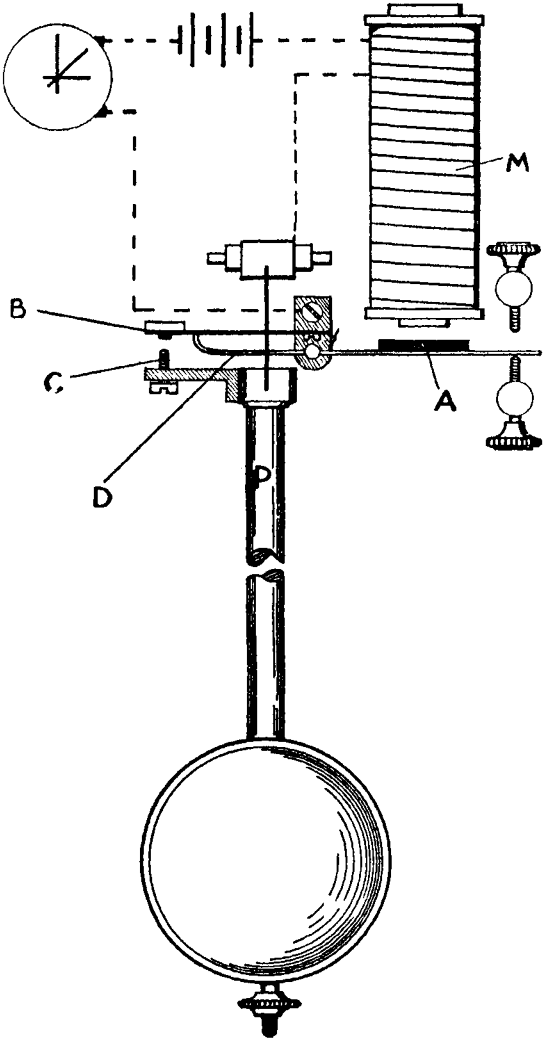

FIG. 44.—Froment

behaves exactly like its counterpart in a Bloxam or Grimthorpe gravity escapement; that is to say, the pendulum picks B up by screw C on its swing to the left, but on its return does not part from B until the latter has reached a point below that at which the pendulum found it, the difference being the impulse. The raising of B after it has given its impulse to P is accomplished by the armature A, which is heavy enough for the purpose. B and C are in contact during impulse, whilst magnet M lowers D out of the way.

In attributing this to Froment, I follow Du Moncel's *Exposé des Applications d'Electricité*, published in 1855, but other names have been associated with it, such as Liais and Verité and later on Tiède and Knoblick, whilst Sir David Gill, unaware of any anticipation, described it to the British Association in 1880 and used it in his ill-fated Cape Observatory clock. Finally, Mr. Cottingham made one for the Edinburgh Observatory during the war which was the subject of a very interesting mathematical analysis by Professor R. A. Sampson, F.R.S., the then Astronomer Royal for Scotland, to be found in the Proceedings of the Royal Society of Edinburgh for 1918.

The late Sir David Gill, who, in his youth, was apprenticed as a clockmaker to the well-known Clerkenwell firm of Messrs. R. Haswell & Sons, was appointed by the British Association in 1879 to form, with Sir Howard Grubb, Professor Forbes, and Mr. Ginningham, a committee to consider the question of improvements in astronomical clocks. He set out the ideal for which he and his colleagues had to strive in the masterly manner we would expect from him, thus:

"To maintain the motion of a free pendulum in a uniform arc, when the pendulum is kept in uniform pressure and temperature, and to record the number of vibrations which the pendulum performs, is to realize the conditions which constitute a perfect clock."

And he produced the device illustrated in fig. 45 as a perfect solution of the problem, with one reservation only—the contact—whose reliability was doubted. It will be observed that fig. 45 is identical in principle with fig. 44, so I have used the same reference letters and need not repeat the description.

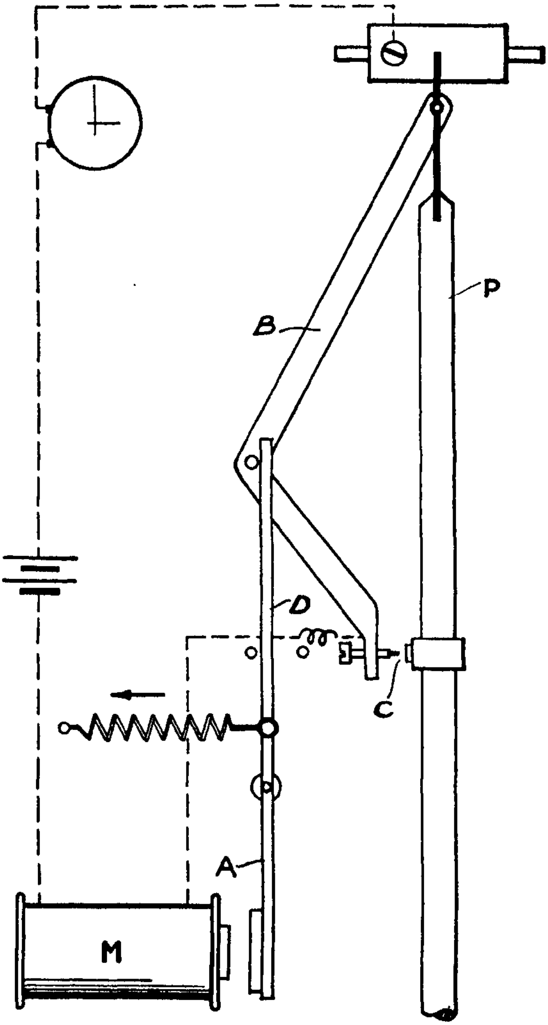

FIG. 45.—Gill's adaptation of Froment

Unlike Shepherd's, the pendulums of Froment and Gill are not called upon for anything, not even to unlatch the maintenance, which is what a pendulum expects to have to do for any gravity escapement. If it were not that they pick up a gravity arm and return with it to a lower point, they could be called free pendulums. Where then does the contact energy come from if it does not come from the pendulum? Primarily from the electro-magnet whence the energy is always derived, but the point is how does the energy reach its job of contact-making? Is it first put into the pendulum and then taken out of it as in Shepherd's? No. Magnet M stores it in raising A (fig. 44) or in a spring (fig. 45). The energy is then transferred from A to B (fig. 44) or from the spring to B (fig. 45). In both cases B delivers the energy, i.e. the impulse to the pendulums *through the surfaces of the contact* in the act of driving them.

Neither the original inventor nor a single one of the reinventors ever gave a word or sign to show that they understood this fundamental principle or were aware of its importance. They reaped little advantage from it, since the energy is transferred too slowly to be of any considerable use in improving the contact. The transfer occupies the whole period of the operation, viz. about one-third of the total time measured, throughout the whole of which period current is passing. Their escapements consequently still remain gravity escapements with all the faults of that type.

It is to be regretted that so many subsequent inventors failed to find this foundation-stone and to build upon it, but blundered in ignorance on the same construction, putting it in a different or indifferent form, without adding anything to it or benefiting from the precious jewel it contained.

I will refrain from putting them in the pillory. Students who wish to study some examples are referred to chapter XI of the first edition of this work. The only merit of these inventions is that the pendulum is not called upon to unlock the maintenance nor to provide power for making contact.

Sir David Gill failed to make anything of his clock either here or at the Cape, where much money was spent upon it and its constant temperature chamber—a water jacket.

The freeing of the pendulum from extraneous work was good; transmission of energy through the contact was good;

but these alone could not suffice, as we shall see in a later chapter.

Interference was still there, and the energy devoted to making contact was insufficient for the safegoing of the mechanism itself; still less was it sufficient for time-counting and the effective control of external apparatus.

Unfortunately, Gill and his colleagues took the wrong track in their efforts to deal with the contact difficulty. They were unconscious of the principle of transmission of energy through the contacts although they were using it and, instead of concentrating upon that principle and developing its application, they assumed that the energy *must* come from the pendulum and that the pendulum alone could discharge the impulse, so they wandered off into the use of Crooke's vacuum tubes containing radiometer mills as light relays, forerunners of our photo-electric cells of to-day.

Those who have done me the honour to follow my contributions to this subject will realize that I set out in 1895 in the diametrically opposite direction, recognizing that switching was a brute-force operation and thât it must be accomplished without interfering with the pendulum.

I ought to add that Favarger & Co. of Neuchâtel make a very satisfactory regulator on the Froment principle, but no Froment clock can ever quite reach the front rank, its performance being limited by the nature of its escapement. It is as good as the best Grimthorpe gravity escapement, perhaps a little better, because it has no unlocking to perform; but that is just not good enough.

CHAPTER X

THE TRANSMISSION OF ENERGY THROUGH THE SURFACES OF THE CONTACT, AND HALF-MINUTE PROPULSION

In the last chapter we traced the somewhat obscure origin of the discovery of a great truth, nothing less than this, that it was possible to obtain an electrical contact from a swinging pendulum without taking energy from it. That truth I have accepted as the first and foremost of a series of principles on which has been based the greatest advance in the science of time measurement in two centuries.

When first the pendulum was harnessed to wheelwork the improvement was of course enormous, and when Graham's dead-beat escapement appeared early in the eighteenth century the unit of measurement of its daily variation of rate in observatories was 0·1 sec. (1/10th of a second). There it remained until the introduction of the free pendulum in 1923–4 brought it down to 0·001 sec. (1/1000th of a second), which implies that the degree of accuracy was suddenly improved one-hundredfold. This will serve to express the revolutionary character of the improvement but it must not be taken as a scientific statement of fact.

But it is a depressing thought that neither the first man to make a contact from a pendulum without robbing it of energy nor those who blindly stumbled upon it afterwards, such as Sir David Gill, realized that they had struck a valuable principle.

Yet it seems so obvious to one who has hitched his wagon to a star and has instinctively and habitually divided electric clock inventors into two classes, the sheep and the goats, that is those whose pendulums, escapements, and wheelwork are chivalrously relieved of all duties except the delicate operation of measuring time, and those that play the goat by trying to combine that lofty function with brute-force jobs.

A probable cause of this lack of perception was the long duration of the electrical contact employed coupled with its operation every second which combination frustrated its practical advantages. The inventors were discouraged by failure, but it is difficult to excuse their blindness on the ground that immediate reward was lacking; they should have recognized an obvious natural law and put their faith in it. The fact that the force involved in giving the impulse every second or every two seconds was too small for the purpose of making a reliable electrical contact was the rock on which Sir David Gill's Cape Observatory clock split. He knew of no other means of keeping a pendulum swinging than a "tick-tock" escapement of some kind, so he had nothing wherewith to reinforce his contact. Clocks had been ticking for over two hundred years and seem to have had a soporific effect upon the minds of clockmakers, lulling them to sleep or producing mental atrophy.

Hipp's clock, invented in 1842 or earlier, and described in chapter VIII, ought to have taught the merit of occasional impulses, but it did not. That intrinsic vice of all escapements, the long and almost continuous interference with the freedom of the pendulum, was never mentioned in text-books and was accepted as inevitable, if considered at all. If only clockmakers had been taught to question everything and to encourage a "large and liberal discontent"!

In this book I have attempted to trace the progressive development of electric clocks, their evolution from the crude ideas of early inventors to the marvels of automatic accuracy that we enjoy to-day. But it is only an attempt because when every inventor reveals his ignorance of the work of his predecessors the evolution is confused and is in any case a very slow process. The causes of failure were not recognized and were repeated *ad nauseam*. Useful features seem to have arrived by chance, since the inventors of the systems in which they appear fail to mention their merits, whilst they often eulogize commonplace features, imagining them to be original.

A curious example of this is the origin of the idea of impelling the controlling pendulum at long intervals, every half-minute or so, instead of using the ordinary escapement which gives impulse to the pendulum at every beat.

The real merit of the idea was neither understood nor recognized at the time even by the inventors themselves, as is evident from their patent specifications; yet the advantages that flow from occasional impulse are so great that they were destined to play a large part in the recovery for Great Britain of the world's record for accurate time measurement in 1923.

When investigating the priority of an invention have we not often seen that when the world is ripe for it, when the development of the science concerned calls for it, the required invention springs up almost simultaneously from half a dozen different sources?

A breakaway from escapements was urgently needed at the beginning of this century, and while no doubt Puck said to himself "what fools these mortals be" in neglecting Hipp, he gave us another chance. For example, the following patents by Rudd in 1898, Campiche in 1899, Lowne in 1901, and Palmer in 1902 describe pendulums receiving impulses at wide intervals only, and make no mention of escapements.

Rudd was a genius; he achieved a *free* pendulum, the story of which will appear in a later chapter, and gave it impulses once a minute simply because it didn't want more. But no one took the slightest notice of his work, and I did not discover him until ten years after he filed his patent.

In the Campiche system a pivoted finger on the pendulum pushes a count wheel tooth by tooth, and a vane attached to its arbor is embraced by two contact springs shown in perspective on the right-hand side of fig. 46. Fig. 47 shows how this impulse is imparted to the pendulum.

The movement of the armature A towards the electromagnet stores energy in the spring B, which causes lever C to follow it at leisure and to impart a gentle impulse to the pendulum through the medium of a long and springy finger rod D, centred at E. The fixed stop F causes D to take up the position shown by the dotted lines as C follows A.

It is impossible to commend a long-duration contact deriving all its energy from the pendulum, and that at the end of its swing; and the method of imparting an impulse to the pendulum is frankly bad, but originality lies in the use of a count wheel and in the combination in one circuit of the pendulum-propelling magnet and electrical impulse dial movements. An attempt by a well-known West End clockmaker to introduce this system into London failed in 1911.

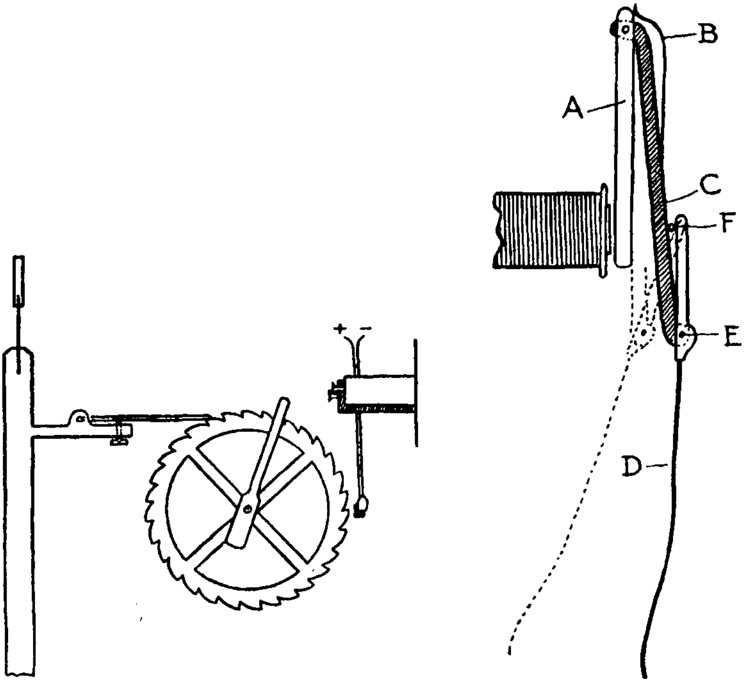

FIGS. 46 AND 47.—Campiche's count-wheel and impulse

The time transmitter of Lowne of Catford is also of interest in that it has a similar count wheel driven by the pendulum operating a contact every half-minute. The action is rather complex, and the contact derives its energy from the pendulum at the end of its swing.

Fig. 48 is taken from patent no. 10541 of 1902, of Mr. W. E. Palmer, and the reader will be struck by its general resemblance to the master clocks of to-day. It is clearly a progressive step, though the contact and impulse still leave much to be desired.

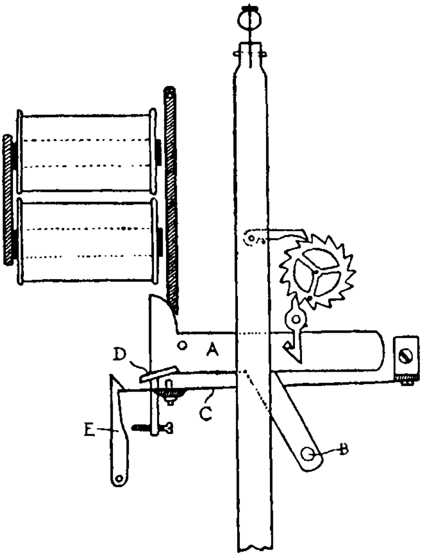

Fig. 48.—Palmer's count-wheel and impulse

It will be observed that, when the count wheel has unlatched the gravity arm A, this latter in falling impels the pendulum by the impulse pin B. A flat steel spring C is held by catch E, and the last thing A does at the end of its fall is to unlatch this spring C, which snaps into contact with the inclined plate D. The magnet then lifts the gravity arm A, and the latter in rising reinforces the contact by the motion of the inclined plate D in replacing the nose of spring C under its catch E. Thus the energy for contact-making comes from the gravity arm and is not taken out of the pendulum.

In this respect it is analogous to the intermediary stage in self-winding clocks dealt with in chapter VII.

The impulsing of the pendulum is open to the same objections as Shepherd's clock, described in chapter IX. To accomplish the release at exactly the right moment in conditions of varying arc was found to be practically impossible at Greenwich, and it is obvious that shock and vibration of the pendulum must result unless this is achieved.

It is easy for us to see now how Palmer just missed doing the right thing. He uses *some* of the energy of his electromagnet for contact purposes, but not all. Had he applied the 1895 Synchronome patent to it he would have used all and created a fine switch. But it must always be remembered to his credit that he did not rob his pendulum of contact-making energy, and that was equal to Froment's forgotten contribution to the science, plus the merit of halfminute periodicity.

Campiche, Lowne, and Palmer can have known nothing of the transmission of energy through the surfaces of the contact, nor have realized that by giving half-minute impulses to the pendulum they could increase the contact pressure 30 times; and they do not appear to have entertained any such lofty motive as that of reducing the interference with the free swing of the pendulum; nevertheless they were the pioneers of ideas that, when properly applied, ultimately became valuable and therefore rank as definite contributions to the science of electric time service.

These ideas may be defined as the use of a count wheel, the giving of the impulse to the pendulum once only in each minute or half minute, and the control of a group of electrical impulse dials in the same circuit.

You will remember that in reviewing self-wound clocks in chapter VII the natural sequence of evolution led us to the Synchronome remontoire of 1895. In that mechanism the gravity lever was concerned in the act of contact-making, and it operated every 30 sec., but it impelled the pendulum through the medium of a Graham dead-beat escapement. The energy expended second by second on the pallets by the 'scape wheel teeth multiplied by 30 was transmitted through the surfaces of the contact; it was in consequence a very successful master clock for the controlling of large numbers of electrical impulse dials and held the field in England for ten years.

That was the state of development arrived at when Campiche, Lowne, and Palmer introduced the count wheel to enable the pendulum to perform its contact-making function every half minute, and at the same time receive the necessary maintaining impulse.

Here then was a simple piece of constructive building obviously asking to be done with materials ready to hand. I wanted a firm and continuous approach of the gravity arm on to the contact screw in the armature, and obtained it by leaving the gravity arm hung up on a catch, employing the pendulum to count out 30 beats, releasing the said arm once every half minute and letting it down firmly and steadily into contact. That was done in my patent no. 6066 of 1905, from which fig 49 is taken.

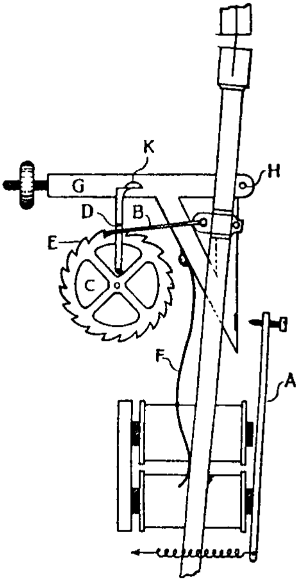

Fig. 49.—Hope-Jones's count-wheel and impulse

The lever G centred at H is supported on the catch K. The little lever B carried on the pendulum propels the wheel C tooth by tooth, normally passing underneath the stop D until it rides at a higher level on the shallow tooth E, when it engages the stop and releases the catch K. The gravity lever G then falls and imparts an impulse to the pendulum through the feather-spring F. This spring-drive is open to many objections and has never justified itself either in the hands of Campiche or in mine. I was groping, perhaps somewhat blindly, for a means of beginning and finishing the impulse with extreme gentleness, and not until three years later did I achieve it in the form shown in fig. 50, which is self explanatory.

The greatest inventions are those that turn an evil into a blessing, that take an antagonistic force and set it to work in your favour, that convert an enemy into a friend.

From the moment I realized that the energy put into the pendulum could be transmitted through the surfaces of the electrical contact the whole aspect of the matter was changed. I welcomed the work to be done, since the heavier the gravity arm and the further it had to be lifted, then the better the contact would be, and I have been surprised at the failure of other inventors to appreciate the complete reversal of policy involved. Some have made use of the device without acknowledgment, apparently unconscious of

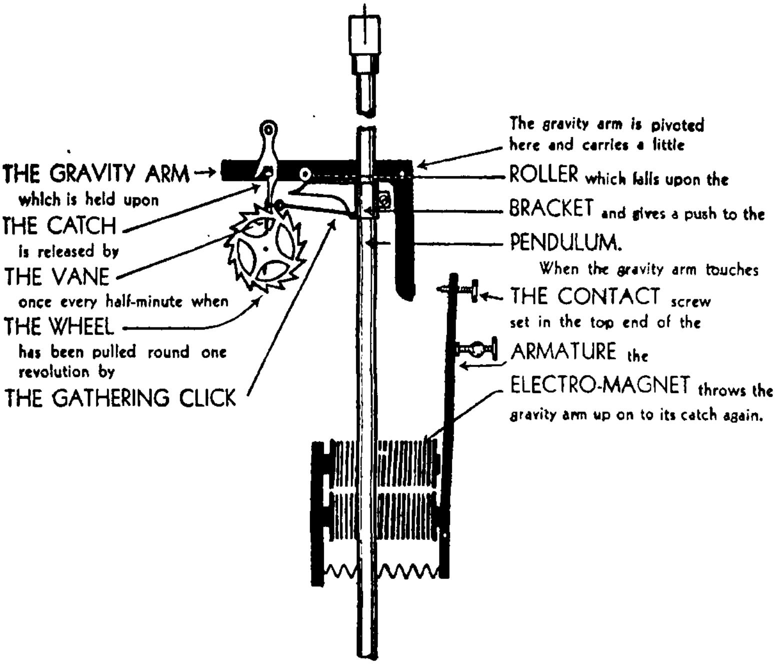

FIG. 50.—The Synchronome switch. Hope-Jones.

the benefits it conferred and failing to take full advantage of it.

You cannot get enough of this energy, it is worth its weight in gold, since it ensures the proper increment of current throughout the whole series circuit necessary to operate the electrical impulse dials. Not until the current has grown to that value which will generate sufficient electro-magnetic energy to raise this weight will the switch operate, and all this time more and more energy is expended upon the pressing together of the two surfaces of the contact. Ultimately momentum comes into play and ensures a clean and rapid break.

This great and first main principle of the Synchronome remontoire was clearly enunciated in my lectures and patents from 1895 onwards, yet absolutely ignored by the horological schools, journals, and text-books of the rest of the civilized world. It has never been understood or appreciated in France, Switzerland, or Germany, nor mentioned in their technical press; but it is their loss, since by its use the supremacy of British practice has been established. A welcome exception was recognition by the Franklin Institute of Philadelphia, Pennsylvania, in 1935.

CHAPTER XI

ELECTRICAL IMPULSE DIAL MOVEMENTS

Bain, Wheatstone, Shepherd, Garnier, Breguet, Reclûs, Perret, Morse, Magneta, American Types, Hipp, Siemens and Halske, Aron Grau-Wagner and Synchronome

IF the clock whose evolution we have been discussing was merely an independent self-wound one, then the only justification for investigating its principles in detail would be as a step in the development of the free pendulum; but it is more than that, it is a master clock, endowed with peculiar merits and abilities as a switch for transmitting an impulse every half minute to a circuit of electrical impulse dials.

It is therefore fitting that we should now give a brief review of the many methods that have been suggested for converting half-minute impulses into rotary motion for advancing the hands of a clock.

We thus reach the third division of Bain's classification (see page 6), having dealt faithfully with synchronizing systems and independent self-contained clocks.

In chapter II, figs. 3, 4, and 5 depict circuits of propelled dials operated by electrical impulses transmitted by the master pendulum. Thus the earliest electric clock patent in this or any other country clearly outlined the proper method, and we are to-day in the main doing what Bain told us to do.

He failed to accomplish it himself because his electro-mechanical details were at fault. His transmitter was a seconds pendulum which made contact every swing and transmitted uni-directional impulses to dial movements as illustrated in fig. 51. A coil of wire, A, is suspended from two insulated springs between two permanent magnets, M, and consequently vibrated in accordance with the master pendulum, advancing the wheel D by means of the gathering click C and backstop B. The moving coil in a magnetic field is very efficient and needed to be, since in those pre-Leclanché days Bain relied upon an earth battery.

This is the first step-by-step electrical impulse dial movement in the history of electric clocks. It will be observed that there is nothing to prevent the wheel D from overshooting in a forward direction as a result of its momentum, but in other respects it is not very different from other uni-directional movements in use to-day.

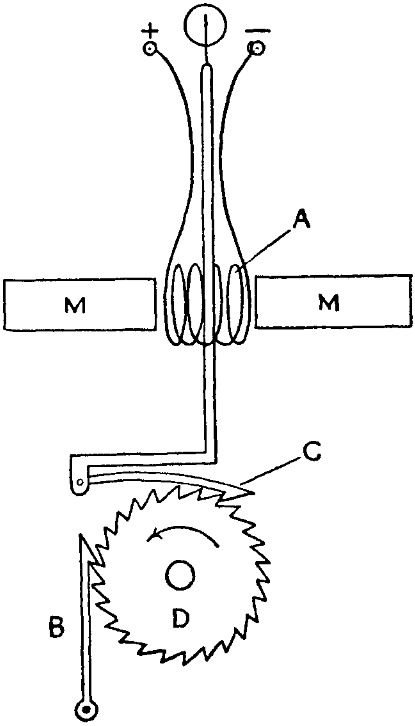

FIG. 51.—The first electrical impulse dial movement. Bain, 1840

Shepherd's dial movements were designed on similar lines in 1850, but have survived only at Greenwich Observatory, where their peculiar periodicity of 2 sec. has become standardized, and a reliable impulse is now transmitted to them.

So we must blame Bain's and Shepherd's contacts for the failure rather than the movements themselves. Similarly, Wheatstone's dials—forerunners of our moving coil galvanometers—were condemned by the egregious attempt to operate them by induction derived from the master pendulum.

A more practical periodicity would have been one impulse per minute, as this would have given quite a sufficiently frequent movement of the minute hands to keep pace with the speed at which life was lived in the middle of the last century. This was adopted in France, the Lille railway station being equipped by Paul Garnier with eighteen electrically propelled dials driven by minute impulses in 1855; Breguet's successor erected also seventy-two in the streets of Lyons in the following year, and thereafter the French text-books contain numerous examples of *compteurs électro chronométriques* responding to minute impulses. To this class belong also the minute periodicity system of Victor Reclûs of Paris, whose self-wound clock was illustrated in fig. 33, the system of the late Colonel David Perret of Neuchâtel, and many American systems, not inappropriately called "minute jumpers," such as those of Warner, Howard, and Morse.

All these systems, including a dozen English of a similar type, have—or had, for few have survived—the same essential features. A master clock (usually an ordinary key-wound one, but in some cases self-wound) is fitted with a make-and-break contact operated at minute intervals by its wheelwork, in some such manner as that described in figs. 31, 32, or 33 in chapter VII, page 49. This contact (sometimes relayed) transmits a uni-directional impulse from a battery through a circuit comprising a group of dials arranged either in series or parallel. Each dial is provided with a movement whose function is to advance a toothed wheel by one tooth by means of the reciprocating armature of an electro-magnet every time it gets an impulse. The armature lever usually works against a spring or weight, and progresses the hands in much the same way as Bain did in 1840.

Another obvious method is to propel the wheel half a tooth at a time by means of an anchor escapement, as shown in fig. 52, in which the pins P both *drive* and *lock*. The arms of the anchor are rigidly fixed to the armature A, but they may be detached and coupled by springs as in my patent no. 1587 of 1895, or as in the Magneta patent no. 15833 of 1901, fig. 53, with polarized action.

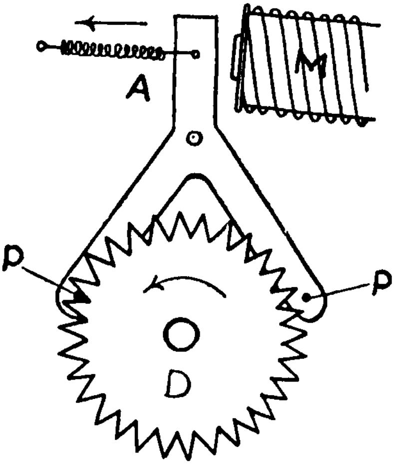

FIG. 52.—Pin driving and locking

But of all the methods of oblique propulsion I prefer that of Sydney J. Smith, who rocks a single pallet B between the teeth of the two wheels, as shown in fig. 54, taken from his patent no. 227499 of 1923.

All these dial movements are capable of being satisfactorily locked between impulses when well made and adjusted, but they lack efficiency and are not used for heavy work. As a matter of fact, with the exception of the Magneta, whose electrical impulses are derived in a totally different manner, none of them has survived, and synchronous working of large circuits of electrical dials with uni-directional impulses has never been successfully achieved by these means.

I never had any doubt as to the real cause of their failure, and the conclusion I came to forty years ago is clearly confirmed by the history of the development of electric clocks on the Continent and in America throughout the latter half of the nineteenth century and since.

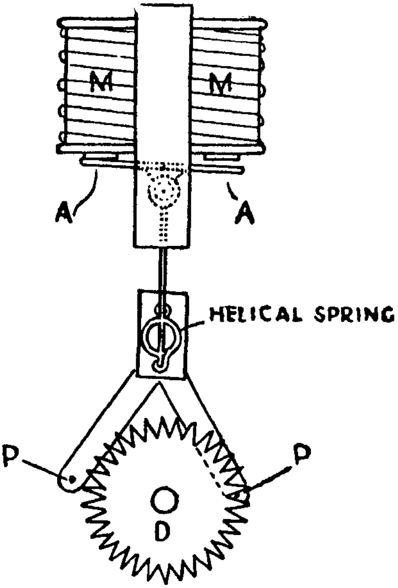

FIG. 53.—"Magneta," polarized pin driving

The trouble lay not in the dial movements themselves, but in the nature of the electrical impulses transmitted to them. In other words, the contacts were at fault. The energy devoted to operating them was insufficient, being only what could be grudgingly spared from the timekeeping function of the master clock, and they were lacking in precision in the make and break. Their duration was arbitrarily fixed, which usually meant that it was very much too long and added to battery worries already sufficiently acute because unrelieved by any compensatory action or warning of impending failure. In every circuit of dials there usually are some whose weights or springs are more delicately adjusted than others, and these will occasionally respond to the partial impulses that are produced when a contact is not perfectly clean and decisive in its make and break.

In the welter of failure of all these systems during the fifty years that followed Bain, his simple conception was lost or abandoned. The direct method of one-wheel step-by-step dial propulsion was assumed to be impossible, and all sorts of comparatively complicated systems were evolved, some of which we will now discuss.

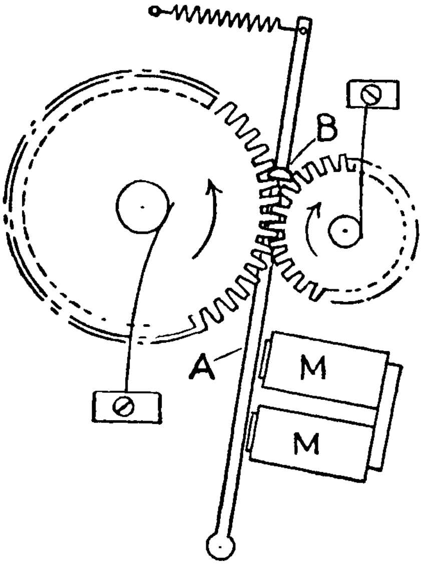

FIG. 54.—S. J. Smith, 1923

It was the realization of this failure in 1895 that led me to make a careful analysis of these systems, and I found in them ample cause for the backward state of the science and practice of electrical time service which lagged far behind the progress of telegraphy, telephony, light, and power, and the other electrical achievements of the nineteenth century.

The clockmaker that knew little of electricity put a pin on one of his gently moving wheels to engage a light spring, and made a poor contact; while the electrician, knowing little of horology, did the same with a stiffer spring, and stopped the clock or spoilt its timekeeping properties. That sort of thing had been going on for fifty years, and had ruined the reputation of electric clocks in this country; it ultimately killed all attempts at simple uni-directional systems, though some of them died hard; it drove us to the synchronization of ordinary clocks by electro-mechanical devices; it drove Paris to a pneumatic system and produced complicated methods in Germany and Switzerland in which the current was reversed at each impulse.

Nevertheless, efforts to produce dial movements that would keep in step in spite of inferior contacts still persisted, long after the real source of the trouble should have been recognized. This delayed the evolution of the science, not only here but abroad, and it is instructive to note how the difficulty was met in various countries.

In America the tendency was to increase the mass and consequently the inertia of the moving parts, so that nothing less than the main impulse would operate them. This is not always successful, and it invariably implies waste of energy, yet the practice is in general use throughout the United States and has been so for fifty years. A system of reporting back and automatic correction of failing dials has been introduced by the International Time Recording Company Ltd. Though this is ingenious and effective, one always regrets the necessity of employing a watch-dog.

On the Continent the trying out and turning down of uni-directional step-by-step dial movements was much more rapid. So far as I have been able to ascertain, Hipp was the first to realize the futility of the contacts of his day and to introduce a radically different method that was destined to establish what we may conveniently call continental practice in electric clocks.

He reversed the polarity of his battery every minute, or in other words he made his master clock transmit an impulse first in one direction and then in the opposite direction, and employed polarized dial movements which rocked the armature to the right at one minute and to the left at the next. Every impulse may therefore consist of a whole group of untidy splashes without putting one of the polarized movements out of step.

Fig. 55 is a plan view of the pivoted armature A and the poles of the electro-magnet between which it rocks. The armature A being permanently magnetized, then according to the direction of the current passing through the electro-magnet the pole on the right will attract whilst the left-hand one repels at one minute; the left attracts and the right repels at the next minute. The oscillatory motion that results is converted into a rotary one by a verge escapement.

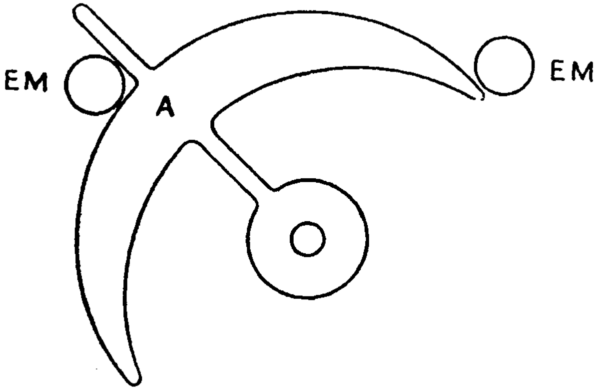

Fig. 55.—Polarized dial movement. Hipp

The system of Siemens and Halske and that of Dr. Aron, both of Berlin, are of this class, whilst those of Grau and Wagner of Wiesbaden also employ polarized movements, but their armatures are rotary instead of oscillating. Fig. 56 shows how this is done, it being understood that the double cams constituting the armature are associated with the opposite poles of a strong permanent magnet, as lettered N and S. Hence successive impulses passing through the electro-magnets alternately in opposite directions will cause rotation in steps. The master clock is a key-wound one, with a separate power train for making contact which reverses the polarity of each impulse. The dial movement may be described as an alternating current motor driven one-quarter of a revolution every minute.

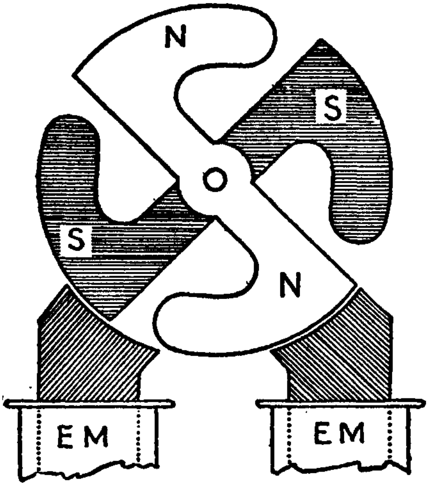

FIG. 56.—Rotary dial movement. Grau-Wagner

This method of reversing the current at each minute held the field in Switzerland and Germany for a long time, and it is still in use. In fact it has outlived the stage of the proprietary article protected by patents, and in one form or another is manufactured by such firms as Favarger of Neuchâtel, C. Theod. Wagner of Wiesbaden, Hoerz of Ulm, Weule of Bockenem, and Siemens & Halske of Berlin. A few installations have found their way into England, but polarized working has never taken root here, for the sufficient reason that, as we have seen, a standard British practice was evolved early this century equally distinctive but far superior.

To take one point alone—the efficiency of these systems in so far as it bears upon the life and management of the battery—the duration of the minute impulses in all the above systems needs to be much longer, and is usually much longer than it needs to be, being a matter of arbitrary adjustment based upon a purely human estimate of the time required to energize the dial movements. It varies in different systems from 0·1 sec. to 1 sec. If we recollect that there are over half a million minutes in a year, this involves a contact time-factor of anything from 15 to 150 hours per annum; and there is nothing more extraordinary in the history of electric clocks than the neglect of this consideration and the waste of electrical energy resulting from contacts whose duration is frequently ten times as long as is actually required to overcome the electrical and mechanical inertia of the dial movements.

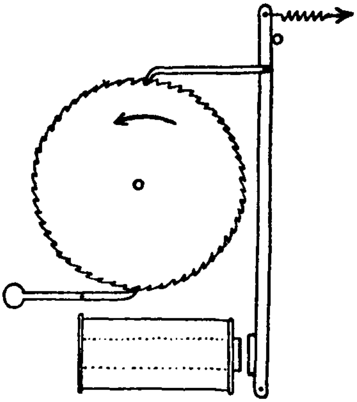

FIG. 57.—Wheel unlocked and without momentum stop

Having satisfied myself as to the main cause of the failure of simple uni-directional electrical impulse dials, I reintroduced them in 1897, when I had a switch competent to operate them. To convert electrical impulses into rotary motion most inventors began with a rocking lever carrying a driving pawl at a tangent to a ratchet wheel, as in fig. 57. In this and all the other illustrations in this chapter it will be understood that the arbor of the main wheel carries the minute hand, the motion work and hour hand not being shown.

The faults are obvious. The wheel is altogether unlocked, and the momentum of the minute hand will cause it to overshoot. A click was added entering the teeth of the wheel along a radial. This was the *cliquet d'arrêt* of the *compteur électro-chronométrique* of the French text-books, illustrated in fig. 58. This prevented overshooting, but left the wheel normally unlocked. However, that was easily set right by reversing the action of the spring and magnet as shown in fig. 59.

This design demanded great accuracy of wheel cutting and mounting and fine pivoting of the levers. Each of the three clicks had to operate in their respective teeth in perfect phase, and when they were spread all round the wheel the slightest eccentricity or other fault caused trouble. There was sufficient reason in this alone for the adoption of the continental fashion of minute periodicity, since a construction that was difficult with a wheel of 60 teeth became impossible with the small tooth pitch involved in 120 teeth, but minutes were good enough to keep pace with life as lived in the middle of the last century.

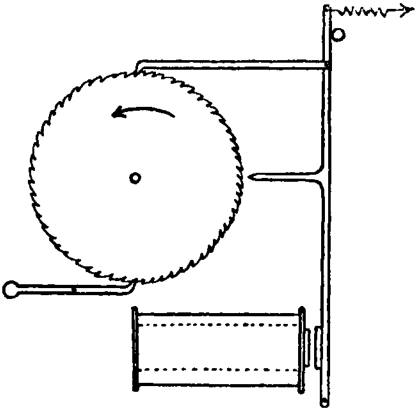

FIG. 58.—With momentum stop, but normally unlocked

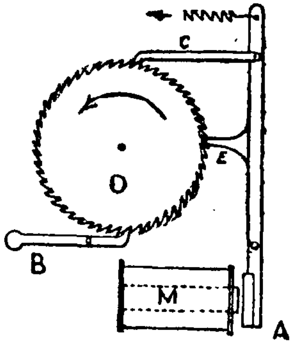

FIG. 59.—With momentum stop normally locked

The invention of the Synchronome switch in 1895 introduced a satisfactory electrical contact that could be relied upon to transmit a uni-directional impulse perfectly clean in the make and break, and made it worth while to study the problem of step-by-step propulsion as applied to the hands of clocks. The philosopher's valuation of a man's wealth being estimated by the things he can do without, and this being even more true in the field of mechanics, it behoved us to consider how one part can be made to serve two or three purposes.

The result of the effort is recorded in patent no. 7868 of 1897, from which I reproduce fig. 60, which shows how the functions of the *cliquet d'arrêt* are performed by banking the nose of the driving click against a fixed stop and by so shaping its underside that the raising of the backstop click retires both from the wheel, thus providing facility for setting to time and zeroizing. The principles involved are worth describing since they form the basis of all types of electrical impulse dial movements now in general use, that directly propel the hands of a clock by picking up one tooth at a time by means of a reciprocating lever.

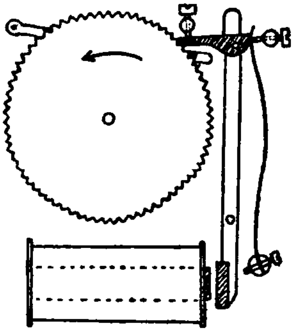

FIG. 60.—Propulsion and lock. Hope-Jones

It will be observed that each tooth of the main wheel forms a right-angled isosceles triangle, the hypotenuse of which forms a tangent to the wheel. The free end of the pawl is also rectangular and normally rests upon a tooth in line with its face, i.e. at an angle of 135° with the radius at this point, and when driven forward it propels the wheel and rising with it finally meets with a fixed stop which effectually prevents the click or the wheel from proceeding farther, and a backstop click prevents the wheel from returning. While the click normally locks the wheel it is nevertheless free to slide straight off the dead surface of the tooth without being lifted when the next impulse is sent out from the controlling clock.

Admitted that the most efficient driving angle is with the direction of motion of the driving pawl at right angles to the radial, and that the best place to get hold of a wheel to secure it against motion is by a stop approaching it along the radial itself, then if it is desired to combine both functions by the simple expedient of providing a momentum stop over the nose of the driving click, the right place to get hold of the wheel is midway between the two.

If the fixed stop is placed above the nose of the driving pawl when it is driving at a tangent as in figs. 56, 57, and 58, then the slightest eccentricity of the wheel will result in the click binding between the circumference and the fixed stop at some points or will allow excessive free play between the backward and forward locking.

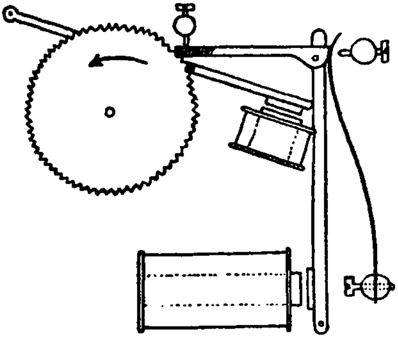

FIG. 61.—Magnetic lock

If, however, the driving pawl approaches the wheel at an angle of 135° to the radius, then its point will rise vertically exactly the same amount as it advances horizontally whatever the shape of the teeth may be. Right-angled teeth are thus indicated and, if the upper and lower surfaces of the pawl are parallel or slightly tapered towards the nose, then it is always free to be withdrawn by an electro-magnetic impulse of short duration. The ill-effects of eccentricity, irregular wheel-cutting, and other imperfections largely disappear, since the only other thing concerned in the precise position taken up by the wheel is the backstop click—a near neighbour—only three or four teeth away

Thus the work of propulsion and locking is concentrated upon a small group of teeth which take up their own position under the noses of the two clicks concerned.

The wheel is normally locked, but its freedom to move forward whilst the driving click is withdrawn must not be permitted if the hands are exposed to the weather. In my 1897 patent I provided for the addition of a small supplementary electro-magnet (in series with the propelling magnet) to hold down the backstop click during the withdrawal of the driving pawl as shown in fig 61, but in 1909 I produced its mechanical equivalent, which was better and simpler. A notch was cut in the back of the armature lever, and the backstop lever extended to carry a square-faced steel pin to hold the wheel during the only time when the propelling operation could leave it unlocked. The series of illustrations, figs. 62, 63, 64, 65, serves to show how the wheel is locked

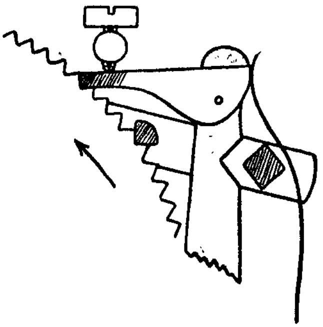

Fig. 62

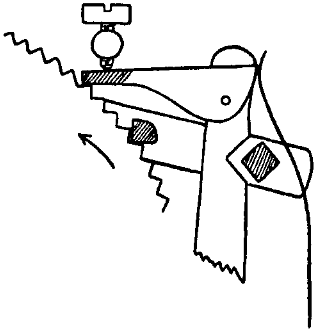

Fig. 63

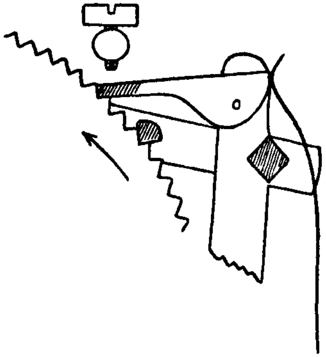

Fig. 64

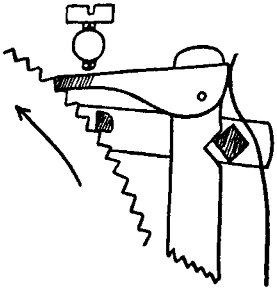

Fig. 65

Dial movement escapement

throughout the whole cycle of the driving operation. It is in fact a perfect escapement which can only pass one tooth at a time.

Electrical impulse dial movements on this system are designed for quick action. We shall see later on, in chapter XX, how the contact in the master clock is prolonged until its duration is sufficient to overcome the electrical inertia or self-induction of all the electro-magnets in series with it. The mechanical inertia of the armatures in the dial movements is designed to be less than the electrical inertia. Hence the armature levers are light in weight, are disposed vertically on their pivots and balanced so that the electromagnetic pull is against a spring and not a weight.

Silence in action can be secured by the simple expedient of raising the pivot of the vertical armature lever which is seen in fig 60 one-third from the bottom. When it is placed one-third from the top, the magnet is given long curved poles over which the armature floats between soft bankings. It can be damped sufficiently for all ordinary purposes, and its simplicity, efficiency, and directness are overwhelming considerations which account for the fact that it is doing, and will continue to do, nine-tenths of the propulsion of electrical impulse dials in this country and wherever impulses derived from a switch of the Synchronome type are available.

But occasionally it is demanded that the action of a dial shall be so quiet that if it is placed in, let us say, a studio of the British Broadcasting Corporation an adjacent microphone shall be unable to pick it up. This has in fact become a recognized test and is known as "microphone silence," which means that it is practically inaudible.

For such purposes rotating movements are desirable, and several ingenious methods have been devised to achieve half a complete revolution of an armature from a single unidirectional impulse. That of G. B. Bowell is illustrated in fig. 66, taken from his patent no. 20496 of 1909. It will be seen that the impulse passes through a pair of coils of an electro-magnet, and achieves one quarter of a revolution of the armature, and when the impulse terminates the poles of the permanent magnet effect a further quarter revolution. The impulse must be of longer duration than that used for a step-by step movement, and the motion of the hand cannot be dead beat.

As regards the question of periodicity, impulses once a minute are still the custom on the Continent and in America, where they are called "minute jumpers."

One of the merits of step-by-step propulsion is dead-beat action of the hands and the elimination of the back-lash, which is inevitable when gearing is employed. Practical politics suggested the smallest periodicity and tooth pitch, i.e. the largest number of wheel teeth that could be economically manufactured in a movement without gearing.

The movement illustrated in figs. 60–65 can conveniently deal with 120 teeth; with 240 teeth necessary for quarter minutes, the tooth pitch would be too small, and 60 unnecessarily large. Such were the material considerations on which half-minute periodicity was established, as standard British practice, between 1895 and 1905 by the Synchronome system when it was ploughing its lonely furrow as the pioneer of electric time service.

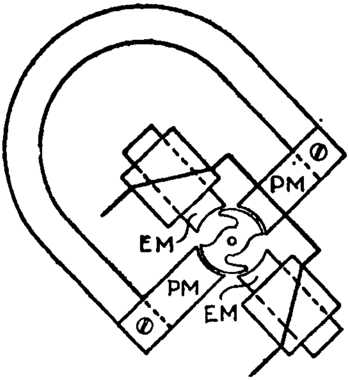

FIG. 66.—Rotary movement, by G. B. Bowell

How often in horology have inventors builded better than they knew! A famous example is the frictional compensation of arc in Graham's dead-beat escapement, a merit of which it seems quite certain he was unaware.

"Nature never did desert the heart that loved her," and it would seem that she holds in reserve unexpected rewards for those who strive to build on scientific principles.

The Synchronome switch contained more virtues than its inventor wot of, and with regard to this electrical impulse dial movement it has far surpassed the hopes of its parents. Its effect upon turret clockmaking was revolutionary, since it enabled sufficient power to drive large clock hands in the open to be concentrated in a small space. This power can now be placed on the very spot where it is wanted, viz. on the back-centre of the dial where it is concealed by the bosses of the hands, thus leaving the clock chamber vacant and available for illumination and enabling the centre panels (carrying movement and hands) to be detached and withdrawn inwards as described in patent no. 239017 of 1925.

CHAPTER XII

THE MOMENTUM BREAK

Mechanical and Electrical Inertia, Battery Warning

We mentioned towards the end of chapter X the use of the property of momentum in a pivoted lever as a means of securing the rapid break of an electric contact. Let us consider this a little further, with the aid, if necessary, of fig. 35 in chapter VII.

The attraction between the poles of an electro-magnet and its armature increases as the space between them diminishes, consequently, if, when the electric circuit is closed as a result of the gravity lever coming into contact with the armature the electro-magnetic force is sufficient to move the armature at all, this force will increase rapidly as the armature approaches the magnet.

When it is half-way the attraction is not merely twice as much as it was, but four times as much, since it increases according to the square of the diminishing distance.

The armature and the gravity arm having considerable mass their moment of inertia is also considerable, particularly that of the gravity arm, since its mass is disposed horizontally at some distance from its centre of rotation.

The job of the electro-magnet being to overcome this inertia and to get both parts moving, it is easy to see what an important part the law of inverse squares plays in increasing the acceleration of the two moving members of the switch, this acceleration reaching its maximum when the armature arrives at the poles of the magnet. There the armature is suddenly arrested whilst the gravity lever is free to fly on.

At first there was some hesitation in relying upon momentum to break the electric current. Inventors who did not fully understand it devised a variety of additions, some to ensure the break, some to increase the duration of the contact to an arbitrary figure, but none of these devices has been adopted since there is no need for them, and I suspect that many of the so-called improvements patented as additions without acknowledgment of the original are prompted by a desire to be different rather than to improve.

It is always better to make use of the forces of nature as a substitute for a more or less complex piece of mechanism. The momentum break is absolutely reliable between wide limits of current variation provided the conditions are properly understood. The motion of the gravity arm must clearly be divided into two parts, its travel in company with the armature, during which it acquires the necessary velocity, and its subsequent free travel until safely lodged on its catch and the proportion of each appropriately adjusted.

FIG. 67.—Oscillographic portrait of half-minute impulse

The momentum break of the switch is due to inertia, and one cannot discuss it apart from *self-induction*, which is only inertia in another form, the one being mechanical and the other electrical. Inertia resists motion. In fig. 35, chapter VII, it will be observed that the inertia and the overcoming of it increase the pressure on the surfaces of the contact. Self-induction resists the flow of electricity; that resistance and the overcoming of it also benefits the switch by prolonging its action. The soft iron core in the coil of wire constituting the electro-magnet of every clock in the series circuit delays the growth of the current, and consequently the action of the switch. As a result every dial exercises its influence upon the switch in proportion to its requirements; thus if a turret clock with magnet of large self-induction is included in the circuit, the duration of the contact will be considerably increased.

Fig. 67 reproduces a photograph of the electrical impulse that passes through the switch and the series circuit of dials every half minute and illustrates the part played by self-induction in dictating the duration of the contact. This photograph is selected from one of a series taken for me by the late Mr. William Duddell, F.R.S., soon after he invented the "Oscillograph," without which no such revelation of exact truth would be possible. The current deflects a very small and light mirror from which a ray of light is reflected on to a photographic plate moving rapidly in front of it. The plates in this case were supported on a catch at the top of a light-tight slide and fell into a red cloth bag at the bottom. They were partially counterbalanced so that their mean speed was 100 cm. per second. The catch was withdrawn by an electro-magnet controlled by a contact on the pendulum set to operate about a second before the observation, the exact time being readily adjustable. The base line in each curve is of course the path traced by the spot of light before and after deflection. The vertical divisions represent one-hundredth parts of a second and the horizontal divisions one-twentieth of an ampere.

The circuit comprised a master clock of a later type as illustrated in fig. 50, and fourteen electrical impulse dials of various sizes, having a total resistance of 60 ohms, and an E.M.F. of 20 volts was applied. It will be seen that when the circuit is closed by the gravity arm sailing into contact at the speed of the moving pendulum there is no bouncing or chattering, but a perfectly clean make. And note also the precipitous break, showing how instantaneously and cleanly the current is cut off at the end of the impulse.

The best speed for the make was determined by experiment, and it is easily adjustable by (*a*) moving the switch vertically up and down the pendulum rod, (*b*) varying the arc of the pendulum, or (*c*) varying the point in the excursion of the pendulum from left to right at which contact was made.

The most important lesson that the Oscillograph has to teach the clockmaker is that, although he is accustomed to regard the effect of electricity as being instantaneous, it is far from being so. Because of the self-induction of the electro-magnets in the circuit of electrical impulse dials, the electrical impulse takes an appreciable time to grow to that value at which it is capable of doing useful work.

According to Ohm's law, 20 volts ÷ 60 ohms, should give a current rate of 0·33 amp. at once; but you don't get it, and you may watch it grow throughout the first, second, third, and fourth one-hundredths of a second and consider the feelings of each electro-magnet in the dial movements meanwhile. When the current has reached a value of little more than 0·25 amp, the magnetic force is sufficient to draw the armatures of the step-by-step dial movements back against their springs. The fact that they have done so is recorded by the little depression in the curve that is seen between the fourth and fifth hundredth of a second and caused by the back E.M.F. or current induced in a reverse direction by the approach of the armatures to their poles.

Thus the dials have received the current they themselves required, and observe that this was not all the current that was available, as the graph shows that the current continues to increase after the dials have operated, but just what was needed to operate them. The switch would still give them what they wanted even if the voltage dropped by 33⅓ per cent or the resistance of the battery were to increase by 33⅓ per cent. In other words, the master clock will not work without giving them a full meal. The explanation is simple: merely that the inertia, the self-induction, and the winding of the Synchronome switch are so proportioned that a higher current rate is required to operate it than is required to operate the dials.

In the Oscillograph we have selected for reproduction, the dials operate at 0·25 amp. in 0·045 sec., and the switch breaks at 0·27 amp. in 0·06 sec., the difference between that and 0·33 amp. being the margin in which the compensatory action of the switch may distinguish itself. And it may be as much more as you like to make it. There is no limit to the margin of battery you may provide, except the noisy action of the switch.

The area enclosed between the curve and the base line represents the quantity of electricity consumed per impulse, which in this case is 0·012 coulomb and, since the impulses are repeated every half minute, this equals about 3½ amp. hours per annum. As each dial requires about 1½ volts across its terminals, the annual consumption of energy per dial is about 5¼ watt hours.

A Board of Trade unit contains 1,000 watt hours, which in pre-war days cost a halfpenny. Not a large sum to pay for uniform and accurate time in two hundred rooms for twelve months! Economy of current, however, ceases to be of any practical importance in a system in which the consumption is negligible in any event. It is the other benefits that count, and it surprises me that the rest of the world's electric clocks should rely for their contacts upon the touching together of two pieces of metal by extraneous means, purely arbitrary in duration and unendowed with those cardinal virtues such as compensatory action and battery warning described in patent no. 6066 of 1905.

The vital principle of the transmission of energy through the surfaces of the contact, which we discussed in chapter X, led us on to the momentum break and the automatic control of the duration of the contact by the self-induction of the electrical impulse dials.

This compensatory action is inseparably linked with battery warning, and it is worth while to devote a few pages to its consideration.

Any source of electric supply may be used for operating a circuit of electrical impulse dials excepting only alternating current. Though D.C. electric light supply is suitable and A.C. easily rectified, most installations are battery driven. Both primary and storage cells are available for the purpose, and whereas the life of the former is limited the latter give practically constant results at the cost of a little regular care in management or by trickle charging. They are therefore the most satisfactory source of energy for large and responsible time circuits.

In the case of primary cells of the "dry" type the limit is usually their ability to resist such natural ageing processes as drying up, which causes a rise of internal resistance and a fall of voltage, whilst the efficient output of wet cells of this type is simply a question of regular and systematic attention. Wet Leclanché cells when left alone are subject to greater fluctuations of internal resistance than their "dry" brothers, and as they rarely receive the attention they require they are not to be recommended, unless automatic warning of impending failure is provided.

We saw in chapter VIII how Hipp's "Butterfly" escapement provided a most effective battery warning, since the weaker the battery the more often the pendulum helped itself to energy. It is so fascinating to watch the trailer passing over the notched block with diminishing arc until caught that no one could fail to note its more frequent occurrence.

Clearly its merit as an invention was all the greater because it was not deliberately invented, but just "happened." It was an inherent virtue of the Hipp method.

Many attempts have since been made to achieve battery warning with other forms of electric clocks. In the case of electrical self-wound clocks with storage of power in spring or weight, methods have been devised whereby in the event of failure of the remontoire action an additional contact is made to bring a reserve battery into use, or to cut out an idle resistance. But no devices of these kinds, however ingenious, have justified themselves, and we must come to the conclusion that watch-dogs in the nature of reserve batteries or extra contacts are futile, since it is more than likely that they will be found to be asleep when called upon after years of idleness.

What is wanted is a warning that takes the form of a difference in action or behaviour in the fundamental apparatus rather than the application of some clever automatic device superimposed upon the original invention and tuned up and ready for instant action, though probably not called upon for some years.

Now the compensatory action of the Synchronome switch, which we were discussing in the last chapter, provides this as inherently as in the case of Hipp, but without varying the periodicity of the contact.

The idea was first expressed in patent no. 6066 of 1905 in the following words:

"In the event of the electrical energy developed being insufficient to raise the gravity arm, the return of the pendulum will assist the magnet and the increased duration of contact will automatically indicate the impending failure of current."

We have seen in figs. 66 and 67 that the consumption of current is negligible; but if a battery is used a time will come when the armature will refuse to move, although the current rises to the maximum value that the battery is capable of developing; in other words, the attractive force of the electro-magnet has become just insufficient to start the armature in motion towards the poles whilst the gravity lever is sitting heavily upon it.

In the meantime the pendulum having completed its swing to the right returns, and the impulse bracket finds the little roller on the gravity arm in the way. Naturally enough, when the inevitable meeting occurs and the armature is partially relieved of the weight of the gravity lever, the magnet will be quite able to complete its job.

What precisely has happened? Normally the gravity lever is thrown up by the armature of the electro-magnet in about six one-hundredths, or shall we say, the sixteenth part of a second. But on this occasion contact is made shortly after the pendulum is passing its zero position from left to right and is not broken again until the pendulum's return to the same spot. Consequently the duration is suddenly increased to nearly one whole second. This is a most efficient warning, not only by the conspicuous difference in the action of the switch, but also in every one of the electrical impulse dials if they are of the step-by-step kind, since there is always a certain amount of backlash when the hand is drawn back, and its sitting there for a second and then advancing becomes a prominent indicator of the presence of abnormal conditions.

Thus without the employment of any special apparatus every clock dial in the building gives warning of impending failure of battery in ample time to enable an addition to be made before any irregularity can be caused.

Without doubt this automatic "reading of the Riot Act" is a most valuable feature whatever type of battery is used and in any electric clock, whether an independent one or a unit in a system of electrical impulse dials.

If this warning is neglected, and if as a result of that neglect the magnet is ultimately unable to replace the gravity arm, even with the assistance of the pendulum, then the pendulum coming to rest at zero will hold the switch open, thus preventing the battery from committing suicide by remaining in closed circuit.

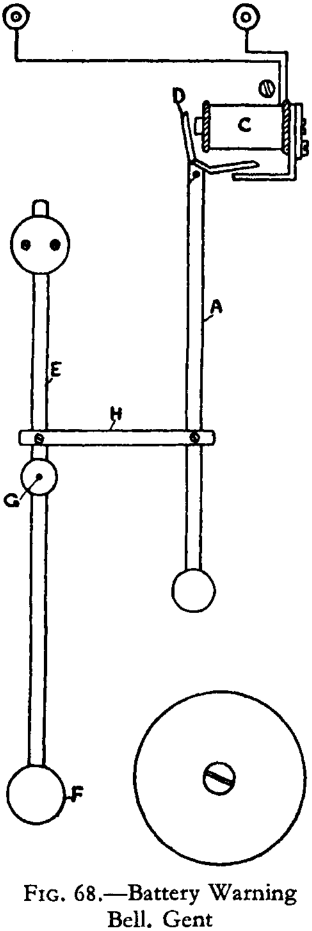

FIG. 68.—Battery Warning Bell. Gent

Messrs. Gent of Leicester were quick to appreciate the principle involved, and by means of a clever combination of multiple levers connecting the armature with a bell hammer they produced a battery warning bell, silent under the normal contact of short duration and ample voltage, but becoming more and more active as the current diminished and the duration of the contact increased.

Fig. 68 is from their patent, taken out by Messrs. Parsons and Ball in September 1905, no. 17826. Magnet C is in the series circuit of dials. Its armature D cannot respond to short duration impulses because the armature lever A is linked by H to an inertia bar E, centred at G, whose lower extremity F is a bell hammer. It can be adjusted to achieve the paradoxical result that the weaker the battery the louder the bell will ring.

FIG. 69.—Battery warning lamp. Hope-Jones

If a visual instead of an audible signal is desired, a lamp may be included anywhere in the series circuit, as described in my patent no. 138708 of 1919. The smallest size made is suitable, preferably with carbon filament, since its negative temperature coefficient rather assists the phenomenon than diminishes it, as would be the case of a lamp having a metallic filament with positive temperature coefficient.

The lamp may be placed behind red glass and surrounded by a suitable notice as illustrated in fig. 69. But it is found in practice that the average user considers both these methods to be puerile and appropriate only in a girls' school.

Just as the motor-cyclist knows when his engine is misfiring, so anyone who is interested in the electric time circuit in his house or office or works at once becomes aware of its sluggish action and understands the sign.

CHAPTER XIII

GRAVITY ESCAPEMENTS: SEMI-DETACHED AND DETACHED

HAVING established the importance of the transmission of energy through the contact surfaces, the momentum break and battery warning, and above all the importance of giving the impulse at wide intervals instead of every second, and having reviewed the subject of electrical impulse dials, we will revert to the horological side and take up gravity escapements where we left them in chapters IX and X.

What precisely do we mean by a gravity escapement?

Obviously it implies a lever or gravity arm which as it falls bears directly upon the pendulum, and is then reset by the wheelwork or other mechanism. To most of us it means Grimthorpe's four-leg or double three-leg as designed for Big Ben in 1854, and since generally adopted for turret clocks. It is so well known that it hardly needs fig. 70 to illustrate it.

The two three-legs, ABC and *abc*, in different planes, have one set of three lifting pins E between them. The pallets D*d* also lie in one plane between the wheels, but one stop (F) lies forward to receive the ABC teeth, and the other (*f*) backward to receive the *abc* teeth alternately.

Cummings originated the idea of this escapement in the eighteenth century; Reid has it in his Treatise, published in Edinburgh in 1826, with springs instead of gravity arms; Mudge carried it a stage farther; but it was Bloxam in 1850 who really invented it, and Grimthorpe merely improved upon his design.

What are its salient features?

The pendulum picks up the gravity arm at A (fig. 71), raises it to B and returns with it to C, the difference between

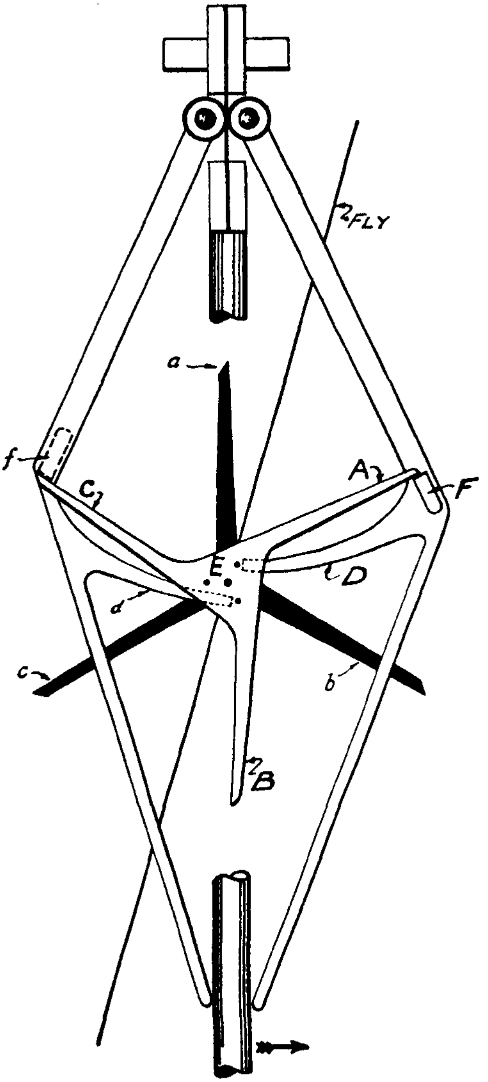

FIG. 70.—Grimthorpe's double 3-legged gravity escapement

A and C being the impulse. The replacement of the gravity arm is the remontoire principle pushed to its uttermost, since the rewinding and replacing of the gravity arm takes place directly and immediately after it has fallen. The storage of power is the minimum, and the frequency of its operation is the maximum. Harrison was the great exponent of the remontoire principle and carried it farther than anyone else in the going train of a clock, but not as far as Bloxam, who made a remontoire of the escapement itself.

The great merit of the remontoire principle is of course that variations in friction in the going train are not communicated to the escapement, an invaluable feature in turret clocks with hands exposed to the weather.

The lifting of the gravity arms is accomplished by the pins E near the centre of the 'scape wheel where the power is great, and unlocking is done at the far ends of long radial arms where the friction is least.

Fig. 71.—Impulse by "difference"

The inevitable variation in that friction does not tend to compensate the circular error as in the Graham dead-beat escapement. It gives you a uniform driving force balanced against a variable unlocking force. Nevertheless the Grimthorpe gravity escapement was a great achievement and is not the least of the inventions that have maintained Britain's supremacy in horology. It has dominated turret clock practice throughout the world since Big Ben was first set going in 1860, and is only now beginning to give ground—slowly, inch by inch—to the direct electrical propulsion of turret clock hands.

In chapter IX we described the electric gravity escapement of Froment (fig. 44), with its variations by Gill (fig. 45) and others.

All these are in effect the Bloxam-Grimthorpe gravity escapement with this difference—that the pendulum is not called upon to release the remontoire for the replacement of the gravity arms, the pallets D*d* and pins E being dispensed with.

In the case of Froment and Prince springs are used as gravity arms, but the principle is the same, just as the Reid-

Winnerl escapement as made by Le Roy for the Paris Observatory and for Edinburgh is Cummings's but for the substitution of springs for gravity arms.

Some have called them free pendulums, but I cannot admit them into that category, since no pendulum is free which is subjected to the interference involved in picking up a gravity arm or spring towards the end of the swing and receiving its impulse by the difference between its lift and fall.

From whatever point of view we look at this escapement the fact remains that the gravity arms or springs (which have a law of their own) are an interference with the freedom of the pendulum, and this interference is in that part of its path where its effects are most prolonged and most harmful.

It is often stated that, if the impulse is uniform, then the interference is uniform and timekeeping would not be affected. It is claimed that the gravity arms are invariable in their weight and in the distance of their fall, and that consequently their effect should be uniform. Let us admit that if the arc were constant the interference would also be constant; but it is a foregone conclusion that the arc will not remain the same because, to mention one source of disturbance alone variations in the barometer will affect it. Can it be suggested for one moment that a pendulum can vary the distance it has to carry the burden of a gravity arm up and down hill at the end of its swing without varying the time of its vibration?

When it is realized that a gravity arm adds to the mass of a pendulum at a point above the bob, and therefore raises its centre of gravity and shortens its effective length, it will be seen how futile it is to suggest that the proportion of "with and without" in the time of each swing can be varied with impunity.

Thus we have seen that the gravity escapement can never achieve the highest precision, even though the pendulum is relieved of the duty of discharging the remontoire. Further, that such a pendulum can never be said to be free; actually the interference is almost continuous, or of the order of nine-tenths of the total time measured.

In the free pendulum clocks at Greenwich and other observatories the interference is confined to a period of about one-hundredth part of the time measured, and that is the interference due only to the imparting of the impulse to the pendulum. There is no other interference of any kind whatever, and I will now endeavour, having reviewed most of the other methods and systems and shown why they have failed to contribute to the science of accurate time measurement, to trace step by step each improvement that has led to the establishing of a new standard of accuracy for observatory clocks.

The principal foundation-stone on the electrical side of the problem is the Synchronome switch, or remontoire, which appears to be destined to play the most important part in every successful variety and type of mechanical free pendulum now or to come; on the horological side the principal foundation-stone is the *detached* gravity escapement.

The first electric gravity escapement described by me—that of Shepherd (fig. 43 in chapter IX)—had what I should call a *semi-detached* gravity escapement, if I were allowed to coin a new term in clockmaking. The pendulum releases the gravity arm as nearly as possible at the end of its swing. Having delivered its impulse the gravity arm is thrown up by an electro-magnet, thus leaving the pendulum free for the remainder of one complete vibration.

Geist of Wurzburg did the same, but greatly improved the method of delivering the impulse. I illustrate in fig. 72 the armature A, which you will see is supported on the catch B until the bracket P on the pendulum releases it. The armature (which is, of course, simply a gravity lever) then falls with its roller and exerts its main effective pressure on the pendulum when it rolls over the corner of P. I also show his electro-magnet M and contact C; but I do so only as a joke, because my readers now know the imbecility of letting a pendulum barge into a spring. In these respects Geist is as crude and futile as Shepherd, yet we respect them both as pioneers.

I adopted his semi-detached escapement in 1905, applying it to my patent of that year; so did Messrs. Gent of Leicester, and in my article in the *British Horological Journal* of January 1906 I described and illustrated it (fig. 73) as follows—

"The top surface of the pallet J, fixed to the pendulum D, forms an arc of a circle whose centre is coincident with the centre of suspension S. The pallet may therefore run so close under the little wheel H on the gravity arm A that the drop is imperceptible and will be uniform in spite of variation of arc or point at which the release occurs. The impulses are uniform in strength and position, and even possible minute elongation of impulses due to wearing away of the contact surfaces may be provided for by allowing the impulse wheel *to fall off the pallet just before contact is made.*"

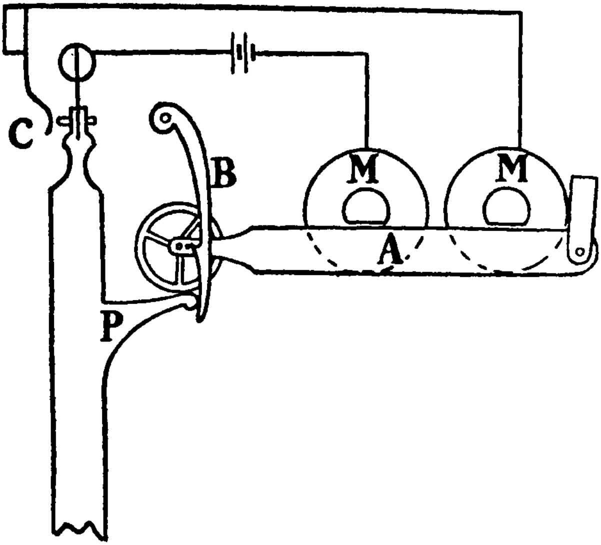

FIG. 72.—Gravity escapement, by Geist

I have italicized the last line because some years of progressive improvement had to pass by before its importance became apparent.

All the rest of it has been freely adopted, and though I looked upon it merely as a stepping-stone to something

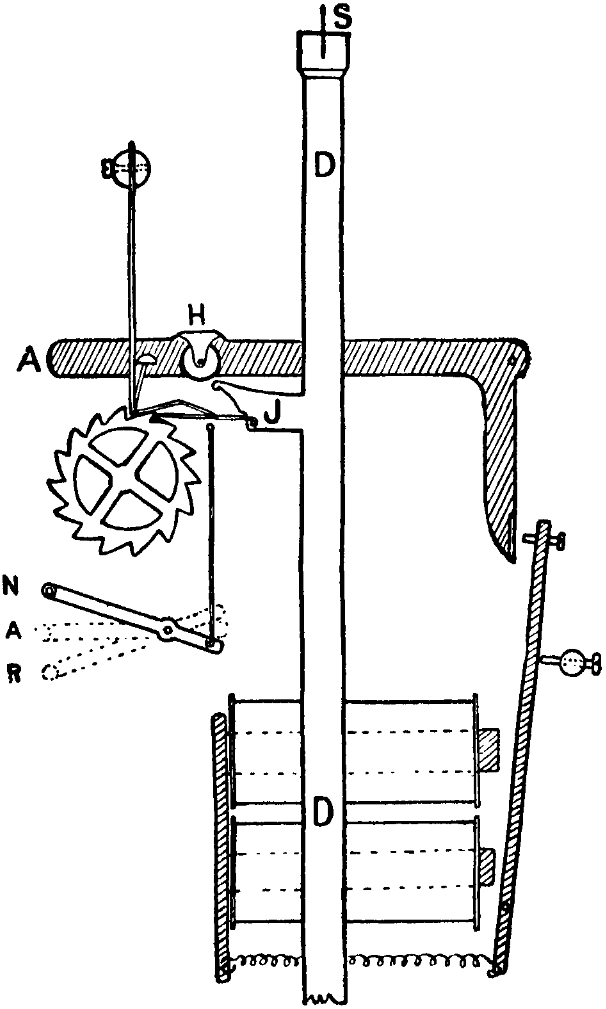

FIG. 73.—Gravity escapement, Hope-Jones, 1905

better, others have considered it good enough for providing commercial accuracy.

To revert to my metaphor, the objection to "semi-detached" houses is that we get too much of the neighbours' piano, gramophone, or loudspeaker; similarly, in semi-detached escapements we have no elbowroom, but charge into the releasing catch at the end of the swing and receive a push.

If there is to be any interference with the free swing of the pendulum, it should take place at or near the middle of its swing, according to the law that is like unto the law of the Medes and Persians, which altereth not. This demands a completely detached gravity escapement.

Instead of a gravity arm or impulse lever being associated with the pendulum almost continuously, we want it to give its impulse and then get out of the way and keep out of the way, then the pendulum might be relied upon to fulfil the great duty for which nature has intended it. And if, further, that impulse could be imparted to the pendulum when it was passing through its zero or central position, then there is no reason why it should not achieve its predestined perfection of time measurement.

Tompion "sensed" this, but he never achieved it. Graham does not appear to have discussed it, and we can hardly blame him for thinking his own dead-beat escapement good enough, since it was good enough for precision clocks of the world for about 160 years, from 1725 until 1885, when Riefler came on the scene.

The detached escapement was first realised in the marine chronometer. Not by Harrison; he only accomplished that greatest achievement of all—the proof to mankind that it was possible to produce a marine timepiece capable of determining longitude.

He did not invent the chronometer, though he made the first marine timekeeper. If that invention must be credited to any one man, it must be to him who made the first detached escapement with impulse at zero, and that was Pierre Le Roy in 1746.

With or without knowledge of that invention, with or without the benefit of Mudge's and Berthoud's contributions to the science, it was Arnold and Earnshaw who equipped our mercantile marine with chronometers and taught Britannia to rule the waves.

The very soul of its success was the detached escapement giving its impulse across the line of the centres, illustrated in fig. 74, in which A is the 'scape wheel and C a fitting on the balance wheel B. It will be seen that the 'scape wheel is normally locked by the step D on the lever FGH, but is released by B when the balance wheel revolves in a counter-clockwise direction by a light one-way non-return gold spring I. The 'scape wheel A then jumps forward rapidly, and one of its teeth imparts an impulse to C just when it is passing through the line connecting the centre of the balance wheel B with the centre of the 'scape wheel.

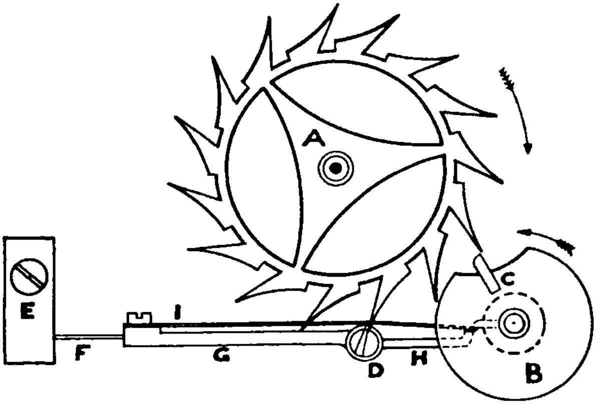

FIG. 74.—Chronometer detent escapement

The merit of the chronometer detent escapement is so obvious that one wonders why a greater and more sustained effort was not made to apply it to clocks before.

One attempt appeared anonymously in *Rees' Encyclopædia*, from which I take my fig. 75. The pallet A fixed on the pendulum at B carries a pivoted catch C which rides over the lever D on its way to the right and trips it on its swing to the left, thereby releasing the 'scape wheel just before the pendulum reaches zero, when A is in a position to receive an impulse from the tooth E.

There is of course an intrinsic difficulty in this mere adaptation of the chronometer escapement to a pendulum.

In the former the comparatively small radius of the balance wheel enables it to get out of the way of the 'scape wheel rapidly, while the pendulum on the other hand can only have a very light and delicately adjusted engagement with it that is not easily achieved at the lower end of the pendulum.

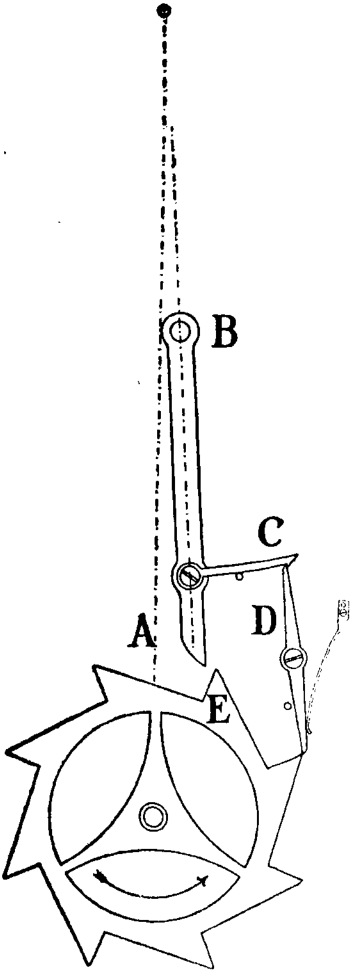

FIG. 75.—Chronometer escapement applied to a pendulum

Lord Grimthorpe, in his *Clocks, Watches and Bells*, says he made one that was quite successful, but he passes on to the gravity escapement of his adoption with which he is apparently quite content.

Nothing further was done along these lines if we except Rudd, who accomplished it and a great deal more in 1898; but his achievement passed unnoticed at the time, and its story must be deferred until we come to the period in which it was discovered and in which it exercised its influence on the science.

It is the late Sir Henry Cunynghame whom we have to thank for championing its application to pendulums and demonstrating its practicability.

It is curious to note how many horological inventions of distinction have emanated, not from clockmakers but from lawyers. He was a barrister and first legal secretary at the Home Office. Following Bloxam and Grimthorpe, both lawyers, he illustrates the affinity between the legal and the scientific mind, of which I have had exceptional experience, having been privileged to share the enthusiasm of judges, barristers, and solicitors in the pursuit of that elusive will-o'-the-wisp, absolute accuracy of time measurement. Among these I would recall the late Lord Alverstone, best loved and known to us Victorians as Sir Richard Webster, Q.C.; W. R. Bousfield, K.C.; Russell Clark, K.C.; John Hunter Gray, the brilliant patent counsel; Rudolph Moritz, K.C., and Mr. A. T. Hare, a Treasury barrister.

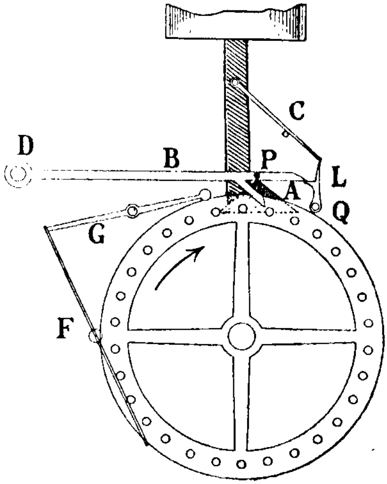

FIG. 76.—Detached gravity escapement. Cunynghame

Thus horology offers a striking example of the value of the amateur in invention. The professional is very apt to get into a rut; he needs to be shaken up by the amateur, who approaches the subject from a fresh point of view, uninfluenced by the traditions of the craft or the dogmas of the text-books and capable of an immense enthusiasm.

Such an one was Sir Henry Hardinge Cunynghame, K.C.B., a man who never touched *any* subject without illuminating it. In 1904 he made a mechanical clock with detached gravity escapement. In that year he gave the series of lectures held every Christmas at the Royal Institution of Great Britain, always announced as "adapted to a juvenile auditory," since it would be beneath the dignity of that august body to refer to them as for children! He chose as his subject "Time and Clocks," and exhibited a model of his clock, which I illustrate in fig. 76.

A triangular piece of steel A is fixed at the extreme lower end of the pendulum under the bob, the left-hand inclined edge of which forms the impulse surface and is fixed centrally. The gravity lever B centred at D and carrying an impulse pin P near its free end is supported on the trigger L centred at Q. This support is removed by means of a flipper or chronometer detent spring C carried on the pendulum, just before the pendulum arrives at zero and when the apex of the triangle is immediately below the impulse pin during its excursion to the right.

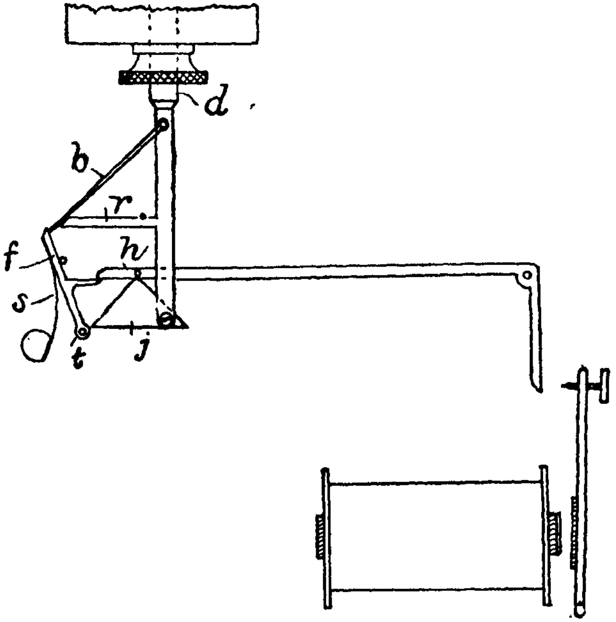

Fig. 77.—Cunynghame-Hope-Jones, 1906

The large wheel E, with pins on its periphery and a fan F gearing it, constitutes the quick-moving end of a weight-driven train, which serves to replace the gravity arm. When the latter falls upon the lever G it releases the fan for half a revolution, and a pin on wheel E resets the gravity lever B on catch L.

It was inevitable that Sir Henry Cunynghame and I should fall together over this, since his gravity lever B in fig. 76 only required the addition of a right-angled arm to engage a vertical armature in order to convert it into a Synchronome switch. This combination was achieved when he gave a lecture at the British Horological Institute in December 1906. It was patented in 1907, patent no. 1945, from which fig. 77 is taken. In this form it was used for timing motor cars for the British Automobile Racing Club's new track at Weybridge, and it was exhibited at the Royal Society of Arts in his Cantor Lectures of January and February 1908.

CHAPTER XIV

THE SYNCHRONOME DETACHED GRAVITY ESCAPEMENT

THERE have been many gravity escapements that were not detached and many detached escapements that were not gravity. Sir Henry Cunynghame's was *both*, and one that delivered the impulse at the middle of the vibrations of the pendulum. And the gravity arm of this escapement requires no clock movement or other mechanism to reset it. It is promptly and reliably reset after every fall because it itself forms part of the Synchronome remontoire, of whose other merits we have already learned something.

It might well be asked, what more can be expected of an escapement? The impulse is uniform since it consists of the same weight falling the same distance every time. In this respect it is better than the chronometer escapement whose impulse is delivered by a 'scape wheel at the quick-moving end of a train of wheelwork, and is therefore subject to whatever variations in friction may develop in that train; and in a chronometer escapement such variations affect the releasing friction as well.

In this escapement there is no train of wheelwork with its inevitable variations of friction and, if there were, variations could not be felt by the pendulum in any event, since the gravity arm is detached. Consequently the releasing friction is also constant.

With respect to its zero impulse, it is on a par with the chronometer, since the pendulum is absolutely free after it has received its impulse and likewise throughout the extremities of its vibrations—that part of its swing when it is doing most of the time measurement, and when the slightest touch will disturb it.

This reads like a catalogue of all the virtues, yet it was not a practical success in this form, and was not introduced or put "on the market."

Its history reminds one of the truth that sustains so many of our special constables and volunteers on home duty during war, that "they also serve who only stand and wait." These principles were all vital and necessary. Without them the recent achievements in precision time measurement could never have been realized; they were tried out and marshalled, but they had to wait for fifteen years for their proper expression and use in the highest grade of service.

Some of the practical difficulties can easily be realized from the illustration, fig. 77, in the last chapter. The triangular form of the impulse block at the bottom of the pendulum is necessary to prevent the apparatus from smashing itself in the event of an electrical disconnection failing to reset the gravity lever, whilst the placing of the movement under the bob involves tying it to the pendulum suspension by means of metal rods of the same coefficient of expansion as the rod.

The mildest expression one can use of this disposition of the parts is that it is a nuisance. The constructional difficulties involved can be overcome in laboratory instruments, but are highly undesirable in a standard pattern for reproduction. Yet it had been a general practice among horological inventors to try out a new escapement by beginning underneath the bob, born probably of an instinct to apply the impulse to a moving mass as near as possible to its centre of gravity.*

But the real trouble lay in the releasing of the gravity lever at each vibration. Too much energy was taken out of the pendulum in that operation, and it proved anew what had already been demonstrated to my complete satisfaction some years earlier, that the solution lay in occasional impulses instead of impulses every second or two seconds, even at the cost of having to ask the pendulum to operate a count wheel.

In that form it was established as the standard half-minute escapement of the Synchronome system, as illustrated in

---

* Sir Henry Cunyngham died in that faith at Antibes in 1932

fig. 78, the original feature being that the gathering hook B rides over the tip of one tooth of the wheel C on its excursion to the left and gathers that tooth when passing through the zero position on its excursion to the right. The release of the catch K is accomplished by the vane D once every revolution just before the pendulum arrives at zero. The gravity lever G pivoted at F then falls, and the roller R runs down the impulse surface of the bracket-pallet J on the pendulum P. L is merely a back-stop.

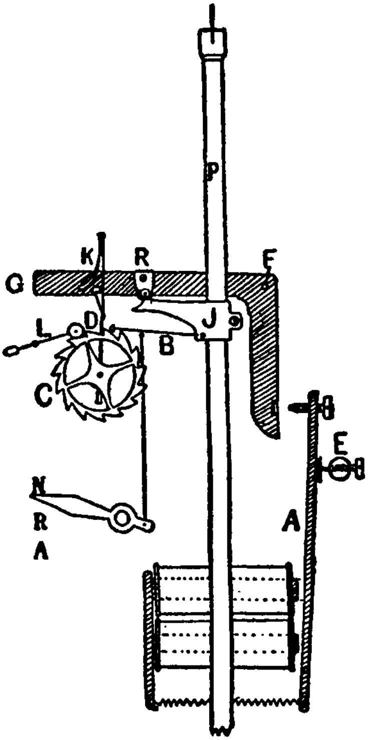

Fig. 78.—Synchronome remontoire, 1907

Those of my readers that are interested in the origin of the modern system of half-minute electrical impulse dials will remember my essay in chapter X on the hidebound custom of the almost continuous impulsing and locking of escapements, and how its drastic reform into half-minute impulses bears upon the transmission of energy through the surfaces of the contact.

In fig. 79 it will be seen that the time counting on an idle wheel which the pendulum is called upon to perform may be a very light job. A small French pallet jewel on a light steel arm is perhaps the best form of gathering hook. A light engagement suffices, and the interference may be strictly limited to a few minutes of arc on each side of zero.

With regard to the unlocking friction, superficial criticism has sometimes suggested that since the impulse is fifteen times normal the unlocking friction and variations thereof are also fifteen times normal, forgetting that the factor that matters is the time during which such disturbances are free to act on the pendulum.

The total period during which a pendulum is subject to interference should always be compared with the total time measured. A pendulum is safe from interference only when it is absolutely free.

It would be instructive to review all known escapements from that standpoint and to place them in an order of merit based upon the degree of their freedom. Such a list would begin with Harrison's Grasshopper, in which the escapement is at work all the time and the pendulum is never free, and would end with the Synchronome-Shortt Free Pendulum, in which the interference is confined to one part in one hundred of the time measured.

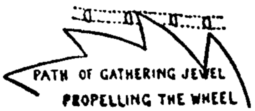

Fig. 79.—Frictionless propulsion

Fig. 78 serves also to illustrate the method adopted for setting forward and backward a circuit of electrical impulse dials. The letters NRA on the lower left-hand side of the illustration show three positions that a lever may occupy. It is normally at N, but when depressed to R the stiff wire rising from its rear end which is bent forward at right angles at the top raises the gathering click B out of engagement with the wheel, thus disconnecting the pendulum from the switch, with the result that all the dials in its circuit are retarded. When the lever is further depressed to A the gathering click B is raised into such a position that it releases the catch K every 2 sec., thus advancing all the dials in the ratio of 15 to 1. This device was born of Daylight Saving, and it may be an opportune moment to refer to the service that the system rendered in the campaign in favour of that reform, opened by Mr. William Willett in 1907.

The watch and clockmaking profession took it badly and prophesied dire results and trouble from monkeying with the nation's clocks. Their opposition to Mr. Willett's first proposal of a gradual change effected in four stages of twenty minutes per week was very commendable and was ably stated by the late Mr. T. D. Wright before a select committee of the House, but the profession as such had no grounds for opposing Daylight Saving in general or the hour change in particular, and I pointed out (*The Spectator*, September 29, 1907) how the introduction of electric time service would prepare the way for this reform and facilitate changing the time of vast numbers of clocks in bulk in the spring and in the autumn.

This prophecy has been amply fulfilled, light work being made of the hour change twice a year on twenty thousand clocks on the Synchronome system in London alone.

The marine master clock described in chapter XXVII, with its facilities for setting clocks backwards and forwards and with its "memory" device, was found useful for demonstrations at his meetings.

I mentioned in chapter X that it was desirable, when imparting to the pendulum a concentrated impulse of considerable power every half minute, that it should begin gently, increase in value until it reached a maximum at zero, and then tail off with equal gentleness. When describing the Synchronome system at the Institution of Electrical Engineers in February 1910 I drew a force curve and showed how the end of the pallet J was shaped to achieve this.

In the discussion that followed that paper Mr. W. H. Shortt suggested that the best path for the centre of the roller when descending the end of the gravity arm was that given by the portion of the curve $y = x - \sin x$, from $x = 0$ to $x = 2$, represented to appropriate vertical and horizontal scales by *i k* (fig. 80), for, since the horizontal driving force is directly proportional to $\frac{dy}{dx}$, the impulse curve is represented by the portion of the curve $y = 1 - \cos x$, from $x = 0$ to $x = 2$ (*l m k* fig. 80). Since the rate of increase and decrease of the horizontal driving force is zero at both the commencement and end of the impulse period as well as at the centre this impulse curve is ideal. The proper shape for the pallet end is given by the curve *n p* (fig. 80), obtained

WILLIAM HAMILTON SHORTT, M.INST.C.E.

by drawing a number of different positions of the roller, the centre of which follows the curve *i k*.

To obtain the full benefit of a pallet formed as just described the roller must always travel to the extremity of the curved end.

It was in connection with this paper at the Institution of Electrical Engineers in 1910 that I first met Mr. Shortt. Though a small matter in itself, it was the beginning of an association that was destined to achieve important results, and it has endured ever since, much to the advantage of the author.

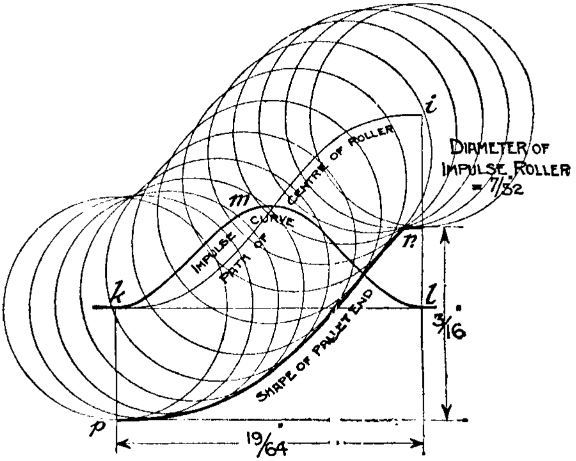

FIG. 80.—Impulse curve, by W. H. Shortt

Mr. Shortt took up horology in that year and accepted as its then greatest achievement and highest exposition of the art the Synchronome-Cunynghame escapement below the bob, with impulse and contact at every other second. His experimental work was based upon it, and his scientific research was devoted to ascertaining its faults and curing them.

I have spoken of the predilection of inventors to try out new escapements underneath the pendulum bob, and of the hidebound custom of giving impulse every second. These bad habits died hard.

They dominated the first five years' experimental work of Mr. W. H. Shortt, which he began in 1910. The story of the development of the invention during this period was unfolded by him in a lecture before the British Horological Institute, appearing in its journal in the issues of May and June 1928. The educational value of his work was undeniable, particularly his investigations of frictional coefficients, yet one cannot help regretting that it should have taken so long to prove that it is undesirable to unlock an escapement by direct collision at high speed and that impulses and contacts every second must give way to widely spaced ones; a fact already demonstrated by the successful commercial development of my half-minute system in the previous fifteen years, the period 1895–1910.

After the war of 1914, in which Mr. Shortt served as a captain of the Royal Engineers, our experimental work, in which he took the lead assisted by the Synchronome Company's workshops, was resumed.

He soon found that the release was taking nearly as much energy as the pendulum, so steps were taken to reduce the size and weight of the gravity lever as much as possible in order to reduce the releasing friction. Three limits were quickly reached: (1) unsafe locking, (2) large and variable pivot friction relatively to the small forces dealt with, and (3) insufficient mass to ensure a good switch.

It was this latter, and my inexorable demand for a substantial Synchronome lever, that led Mr. Shortt to disassociate the two functions of impulsing and switching and to provide a separate lever for each, a light one to give impulse and a heavy one to make contact, the latter being arranged to reset the former mechanically by taking hold of it gently, lifting it slowly, and placing it gently upon its catch.

In fig. 81, based on his patent 9527 of 1915, the light steel gravity lever L is shown in the foreground pivoted at C and ending at the left in a jewel B^1 which falls upon the wheel A^1 on the pendulum or its crutch, when the latter has released it from a catch not shown. After it has dropped off the impulse wheel A^1 the gravity lever L, by means of adjustable push-screw D, releases the Synchronome switch lever G by operating catch K which supports it. When G falls the roller E mounted thereon gently lifts L back on to its catch by its cam action. When it was put on test at Edinburgh Observatory, Professor Sampson, F.R.S., made a mathematical analysis of the escapement in the first of his four papers on Clocks, contributed to the Royal Society of Edinburgh.*

The tests proved that, although some of the original difficulties had been satisfactorily overcome, certain others had been introduced, and that the energy consumed in effecting the release still amounted to some 10 or 20 per cent of the total energy supplied to the pendulum, and that the introduction of the crutch was a retrograde step.

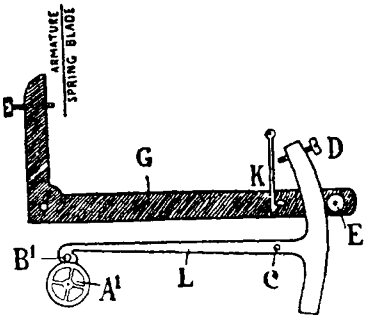

FIG. 81.—Impulse and remontoire levers. Shortt

Later, an investigation was made into the comparative rates of fall of the arc of the pendulum, first of all when swinging freely, and secondly when operating the catch, i.e. releasing the impulse lever, but not giving impulse to the pendulum. By noting the rates of decrease of arc, a comparatively close estimate of the relative amount of energy used up in effecting the release was obtained.

Fig. 82, which is based on the results is most illuminating. It shows the relative amounts of energy that we may expect to have to supply to keep a seconds pendulum with a 10 lb.

---

* Session 1917–1918, Vol. XXXVIII, Part I (No. 11).

bob swinging two centimetres on either side of its zero position with different impulsing arrangements. The shaded portions of the columns represent the energy required by the pendulum itself, while the unshaded portions represent the energy required to overcome the various external frictions incidental to the impulsing.

The improvements resulting from applying the escapement near the top of the pendulum instead of *underneath the bob*, and concentrating 30-sec. impulses into one impulse every half minute, instead of giving it *second by second*, are remarkable and conclusive. Thus in this great trying out of the detached gravity escapement with impulse at zero these two errors were finally exposed and condemned, and the columns of fig. 82 are their tombstones.

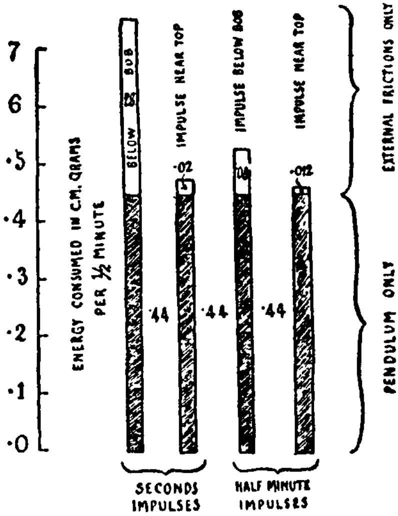

FIG. 82.—Energy expended in keeping a pendulum swinging

But it must not be thought that this period of experiment and research yielded only negative results. It produced at least one real achievement—the disassociation of the impelling and switching functions. This also increased the time interval or lag between the release and the re-setting contact, a point not appreciated then, but destined to contribute materially to the solution of the problem of a free pendulum.

This interval is made up of two portions, the first being the time taken by the impulse lever to run down the edge of the wheel and release the resetting lever, and the second the time taken by the Synchronome remontoire to reset the impulse lever and make contact.

The total value of these two intervals in the case of a seconds pendulum is very nearly a whole second, so that when we are giving the impulse every second the final contact can be used to release the impulse for the next second.

A free pendulum of this type with impulse given below the bob was designed and tried out by Mr. Shortt, but it was found necessary to make the impulse levers extraordinarily light, otherwise the impulses given once per second gave the pendulum an excessive arc that resulted in excessive run of the impulse wheel on the dead face of the levers. Yet these impulse levers had to be heavy enough to release the catches of the resetting levers, and these catches had to be given sufficient spring tension to ensure reliability.

The attempt to reduce these forces led to trouble all round, and thus the truth of the old lesson was demonstrated again, that even apart from releasing frictions the impulse force must be large enough for human hands to handle, and must therefore be thirty or sixty times that appropriate for administering every second. What a long and tiresome process was the learning of this lesson! What years of patient endeavour were needed to overthrow the hidebound custom of giving an impulse to the pendulum at every second!

It may be said that the invention of the half-minute electric time transmitter in 1895, 1905, and 1908 should have been accepted as a final demonstration of the benefits of impulse and contact every half minute, instead of which a long series of analytical investigations was carried out to demonstrate step by step the impossibility of seconds impulses.

Mr. Shortt's previous experimental analysis had proved that it was wrong to attempt the release of a detached gravity escapement every or every other second. This proof was now carried a step further by demonstrating that even when the pendulum was altogether relieved of the duty of accomplishing the release it became mechanically impossible to impart impulses to it every second, owing to the smallness of the forces involved.

The electrical aspect of the problem has already been dealt with in the chapter on Transmission of Energy through the Surfaces of the Contact, i.e. chapter IX, which revealed how essential it was to adopt occasional impulses to produce a substantial switch.

That factor was highly important, but was not considered sufficient in itself, and not until the same conclusion was arrived at from the horological point of view did Mr. Shortt seriously seek for a method of measuring longer intervals, a method involving the synchronizing of a slave clock and employing that clock to perform the escapement function. The delay was disappointing. Indeed, Mr. Shortt and I might have realized it in those early days, but for his persistence in adhering to "impulse and contact every second." This insistence actually produced an intermediary instrument in the nature of a relay, which we called a time transformer, to take hold of 30 successive seconds impulses and to transform them into one impulse every half minute for the purpose of wholesale and economical distribution of time.

For years seconds impulses dogged our steps and tripped us up. I had proved that they were horologically bad, electro-technically bad, and commercially impossible.

For the production of half-minute impulses for commercial purposes from a precision clock with seconds impulses we adopted a half-seconds pendulum synchronized and propelled by means of a one-sided crutch lifted every second by an electro-magnet and operating a count wheel which released a Synchronome switch every revolution. I saw in this a possible slave clock, and forecasted the free pendulum as the clock of the future in a lecture before the Glasgow and West of Scotland branch of the British Astronomical Association at Glasgow in November 1912.

But I had not then learnt how to take advantage of all the natural actions and reactions inherently available in a half-seconds pendulum.

I dealt with that matter subsequently in a paper before the British Horological Institute in November 1929, and have referred to it under "Synchronization" on pages 23 and 24, chapter IV, and we shall meet with it again in chapter XXIII.

CHAPTER XV

ACCURATE REGULATION OF A PENDULUM

HAVING now described in some detail the detached gravity escapement applied to a seconds pendulum, and appreciated the resulting improvement in timekeeping, let us, before proceeding to the evolution of the Free Pendulum, indulge in a little digression and discuss the best way of accurately rating a pendulum.

It is hardly necessary to point out that the rating nut underneath the bob of a pendulum is screwed upwards (front to the right) to accelerate and downwards (front to the left) to retard.

If the screw on which the rating nut turns is a No. 4 B.A. having 38·5 threads to the inch, one revolution will, in the case of a seconds pendulum, alter the rate of the clock by nearly 30 sec. per day. The nut should have a wide flange with thirty divisions engraved thereon representing these seconds.

Since this method of regulation involves stopping the clock and probably disturbing its rate, it is customary on good clocks to fix a tray upon the pendulum and to provide a set of weights by means of which a final adjustment can be made. Having rated the clock as closely as possible till it has a small losing rate, the weights should be dropped on to the tray or taken off with a pair of tweezers. The weights should be engraved with figures showing their effect in seconds per day.

What is the best place on the pendulum for the tray? It will probably be selected by considerations of convenience alone, such as the space available in the case and its accessibility. The effect of the weights will probably be ascertained by trial and error, unless the experimenter is one of those who has emerged from the "rule-of-thumb" stage and wants to know what he is doing and why.

The effect of an added weight upon the timekeeping of a pendulum varies with the position it occupies, up or down the rod. The object of this chapter is to enable calculation of the effect of any weight in any place, or rather to give the mathematical law in the form of a graph, which saves the trouble of calculation.

Observing that *any* weight added in *any* position between the centre of suspension and the centre of the bob will accelerate the clock, it might be assumed that it is the result of raising the centre of gravity. It will be imagined that the whole pendulum is being held horizontally and that a knife edge is fixed in a vice. The centre of gravity will be found by placing the bob on the knife edge at a spot a little above its centre. Having achieved a balance, it will appear obvious that any addition to the rod at any spot will upset it and that it can only be restored by moving the bob on the knife edge, thereby indicating the raising of the centre of gravity and the shortening of the pendulum.

But if the problem is approached in that way, difficulties occur at once. There is no analogy between a simple lever balanced horizontally on a knife edge and a compound pendulum suspended at one end. It will only cause confusion in mind between the centre of gravity and the centre of oscillation, which are two very different things, and it will probably be forgotten that the radii of gyration and moments of inertia are being altered.

The centre of gravity is the centre of balance. The centre of oscillation of a vibrating body on the other hand is that point where, if addition or subtraction is made from its mass, it would not affect its period of swing. This point could only coincide with the centre of gravity and the centre of the bob in a simple pendulum, i.e. one in which the pendulum rod has no weight, such as a single thread from a spider's web. If a pendulum consisted of a uniform straight bar without a bob, that point would be two-thirds of its length from the point of suspension, whereas its centre of gravity would be in the middle.

The prevalent idea that the raising of the centre of gravity with the consequent shortening of the pendulum is the direct cause of quickening its period of vibration must be removed; we have to consider *the whole pendulum as a mass turning upon its point of suspension.* And remember that the raising or lowering of the bob is not being discussed, neither are we considering the transference of some of the mass of the bob to a point higher up the rod—but the effect of adding a little additional weight to the rod.

The period of swing clearly depends on two things: (1) the leverage or turning effect of the weight about the point of suspension, an increase in which would cause acceleration; and (2) the resistance to turning, which is called the "moment of inertia," an increase of which slows the swing.

The addition of a small weight anywhere below the point of suspension clearly increases the first of these, but it also increases the second, because there is now more to be turned. If an engine is imagined trying to accelerate a fly-wheel, and a monkey jumps on to one of the spokes, then the engine has to accelerate the monkey too, and having more work to do it does it slower. So the increased moment of inertia makes for slower motion and a longer period of swing.

If the weight is added at the centre of oscillation, these counteract each other exactly, and the time of swing is unchanged. A weight added at the point of suspension is clearly immobile and inoperative, so at these two points the addition of a weight leaves the time of swing unaltered. Add it anywhere between them, and the accelerating effect will prevail over the retardation, so that the pendulum will make more swings to the hour.

Where will this net acceleration be at a maximum?

The increase in turning effect or the force tending to return it to its zero position is directly proportional to the depth of the added weight below the point of suspension; but the increase of moment of inertia (resistance to turning) about the point of suspension is proportional to the square of this depth. When a term involving a square is pitted against a simpler one in which no square occurs, the graph of their difference is usually an old friend, the parabola. It is plotted

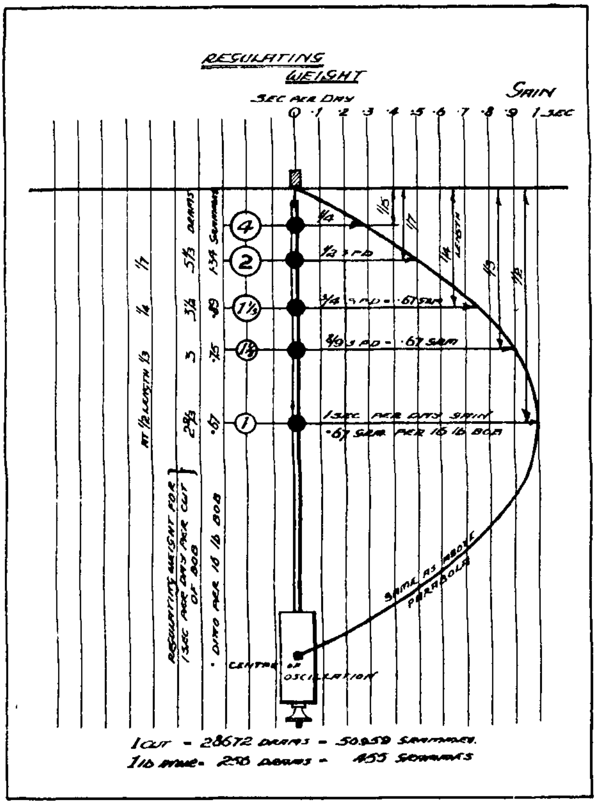

FIG. 83—Parabola showing the effect of a snail crawling down a pendulum

through the centre of suspension and the centre of oscillation, and gives all necessary information.

In Fig. 83 the length of the horizontal lines between the pendulum and the parabola shows the relative effects of a weight. Remembering that the acceleration effect is much greater than the retarding effect, look at the parabola and note how it grows in spite of the more gentle but more quickly growing slowing effect, until the latter stops the acceleration curve from growing any further and leaves it steady at its maximum for a short time in the middle.

Then note the slowing effect, which though small nevertheless has been growing so rapidly as to counteract the gaining effect to some real purpose, until finally it wipes it out altogether when it reaches the centre of oscillation near the middle of the bob.

The diagram is a perfect mathematical solution of the question: what would be the effect on the time of a pendulum if a snail crawled down the rod?

It is unlimited in its application. It can be used in respect of any kind of pendulum clock, domestic or turret, but the figures will vary according to the length of the pendulum and the weight of its bob.

The figures given in the illustration apply to a pendulum beating seconds with a bob weighing 16 lb., which happens to be that of the standard Synchronome master clock.

A weight of 0·67 gramme applied at the centre will accelerate the rate by 1 sec. per day; taking that weight, its diminishing effect is shown as it is raised or lowered: 0·67 gramme is 1/10865th part of the 16-lb. bob. The same proportion holds good for all pendulums of similar construction and may be roughly applied to the weights of their bobs. Thus in the case of a turret clock with a seconds pendulum and a 1-cwt. bob, in which one wants to know what weight will accelerate it by 1 sec. per day when applied half-way up the rod, convert the cwt. into grammes, 50959, and divide it by 10865, which gives a regulating weight of 4·69 grammes.

Alternatively, the diagram indicates what weight will be required to accelerate 1 sec. per day at various positions up and down the rod. Select a gramme as a convenient unit to represent a second, and the parabola says that it will have that effect if placed upon a tray $8\frac{1}{2}$ in. below the point of suspension. A 16-lb. bob being $\frac{1}{7}$ part of a cwt., a seven-gramme weight will be required at that spot on the turret clock pendulum if the bob weighs 1 cwt.

CHAPTER XVI

FREE PENDULUMS

WHEN describing Rudd's synchronizer in chapter V, and regretting that no commercial career was open to such a clever and effective invention, I added, "Yet it has a little niche of its own in the history of horology, because, by means of it, its inventor achieved the first free pendulum. But that is another story, which will be dealt with in its proper place."

This is the place and the time to introduce my readers to what can only be described as the greatest advance in the science of time measurement that has been made for nearly two centuries.

Had anyone told us that before the close of the last century he had made and had working for months an absolutely free pendulum which received its impulse (without asking for it) in the form of a blow of uniform velocity imparted to it as it passed through its zero position, we should have been incredulous.

Yet this is exactly what Rudd did in 1898, the basis of his achievement being a slave clock synchronized by the apparatus illustrated in fig. 21, chapter V; but it lacked publicity, and the busy world passed it by. It has since been my privilege to present to the Science Museum at South Kensington Rudd's "No. 2," which the inventor gave me when retiring to the country in 1930.

Who was this man whom a capricious fate inspired with the brilliant idea? He cannot be called a genius but the seed fell on fruitful soil. He was a seeker after truth, and once having caught the idea, his imagination bodied forth—not words, but models, in his little workshop which was part of his bed-sitting room; but they never saw the light until I discovered them ten years later.

Born in 1844 of a Norfolk family of yeoman farmers, he was educated at Hurstpierpont and apprenticed to Maudsley, Sons & Field, the Thameside engineers. He served Messrs. Gillett & Bland, the Croydon turret clock makers, from 1872 to 1893, and produced the free pendulum in retirement in his 54th year. He lived to see his idea developed in a radically different form, but was assured of a niche in the horological temple of fame before he died at the age of 86 in his old Norfolk home.

If our clockmakers and horological professors had understood Rudd's description of his invention which appeared in the *Horological Journal* of June 1899, and had believed it, they would have rubbed their eyes and would have looked regretfully at their library shelves and those ponderous tomes on the theory and mathematics of escapements, back numbers all of them, rendered obsolete by an impertinent invention that dispensed with escapements altogether and impudently imparted an impulse to the pendulum in the manner that their laws pronounced to be perfection, but that they had ceased to strive after, assuming too readily that it was impossible. They took not the slightest notice of it and, though I have since given it much wider publicity and shown by the achievements of the free pendulum in the observatories of the world that escapements are obsolete, the same textbook dogmas are still being preached and the same escapement drawings used almost exclusively in class instruction.

I was so fascinated with his synchronizer that when I first saw his patent of 1898 (fig. 21), I made a model of it straight away, but I did not come across his free pendulum until 1908. In that year I took Mr. (later Sir Henry) Cunynghame down to Rudd's house at Croydon to see it. I remember how difficult I found it to understand his mechanisms; what they were for and how they worked, and my astonishment that he seemed quite unable to explain them through lack of facility of expression. But once I grasped it, this ideal was the star to which I hitched my wagon, and it was never out of my mind during the experimental period above described.

It was in pre-war years that the idea of a free pendulum emerged from the chrysalis stage, where it had lain hid since 1898, wrapped up by its parent as carefully as a cocoon is wrapped in silk.

The inventor was R. J. Rudd, and he concealed his babe in the swaddling clothes of two articles in the *British Horological Journal* of August 1898 and June 1899. The joke—or the tragedy—of it was that the concealment was unintentional, yet he could not have hidden it better had he been Huyghens who buried his discovery of Saturn's rings in a cryptogram to secure his priority, and yet give him time for further research.

He set out with artless simplicity to describe his invention in full, but his outlook was so narrow that he couldn't see the wood for the trees; he described his mechanisms without explaining their object, and one doubts whether he realized the possibilities of his own invention or its applications. The titles of his articles, "Automatic Regulation of Clocks" and "Controlling Pendulum for Inferior Clocks," alone reveal his limited vision. Yet in spite of their cryptic nature, the germ was there, the feat was accomplished, and the world was shown that a free pendulum was possible. Not that Rudd's devices have ever been reproduced or used; in this respect we are reminded of Harrison, who did not invent the marine chronometer, which he is popularly supposed to have done, but did something much greater by proving the possibility of measuring time on board ship with sufficient accuracy to determine longitude. To accomplish the hitherto impossible is always the greatest, because the first step; lesser men may perfect the means.

Just as the theory and laws of the Hertzian waves, on which the whole fabric of wireless telegraphy is built, lay hid for years in the mathematics of Clerk Maxwell, so Rudd solved the problem of the free pendulum in the last century, but lacking facility of expression he failed to enunciate the principles involved even if he fully understood them himself. He does not appear to have realized that his invention contributed anything to the science of accurate time measurement. He put it forward as a method of improving the timekeeping of a bad turret clock as if to emphasize that his political outlook was confined to the parish pump and that he could not think imperially. Unfortunately he suffered from the inventor's inability to bring his goods to market, and he was constitutionally so impractical that he would not even avail himself of offers of help.

Fig. 84 is compiled from the June 1899 issue of the *British Horological Journal.* In the description accompanying them the fundamental facts essential to their understanding are not mentioned. For instance it is assumed that the reader has grasped the idea of a free pendulum, altogether detached and presumably at a distance from a clock. Underneath the pendulum there is a storage of power adapted to impart an impulse to the pendulum at wide intervals, such as once a minute, when released by an electro-magnet. The function of the distant clock is to close the circuit of this electro-magnet at the time and phase when the free pendulum is ready to receive its impulse.

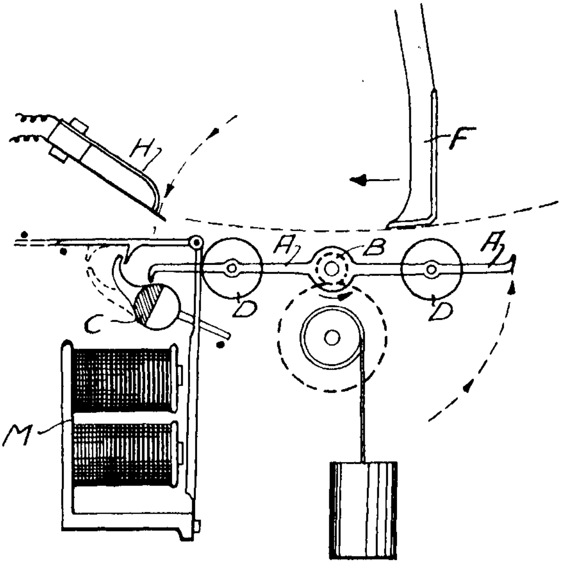

FIG. 84.—The first free pendulum. R. J. Rudd

When the act of imparting an impulse to the free pendulum is over, the moving part which has accomplished it then transmits a synchronizing signal to the clock, thanks to which it is competent to perform the escapement function at the proper time. That is the great fundamental principle of the free pendulum, and though Rudd never expressed it in words I believe that the idea originated with him and that his mechanism was the first to accomplish it. The method of synchronization is not described, but may be assumed to resemble that illustrated in fig. 21, chapter V.

In that, however, the act of comparison was made against a cam on the escape wheel arbor of the slave clock. The amount and the direction of the slave's error was measured by the "feeler" F, fig. 21, page 33, and the slide embracing the suspension spring was re-set accordingly. But it is not good enough to read the clock by the position of its seconds hand. Owing to backlash and other mechanical irregularities, it lacks the necessary precision. To ascertain precisely the time of a clock at any given instant you should take it from the position of the pendulum in its swing. For this purpose he mounted a scythe on the pendulum of the slave clock and arranged the synchronizing signal to shoot out a feeler against the scythe so that the distance travelled by the feeler was dictated by the phase position of the pendulum.

He realized that the comparison between the free pendulum and slave clock must be made between their pendulums and that nothing less than a true reading of their relative phase positions at a particular instant would be good enough to ascertain the direction and the amount of the correction to be administered.

In fig. 84 the lower end of the free pendulum is seen with its impulse face F moving to the left just before receiving an impulse. The impulse will be given by a roller D at each semi-rotation of the lever AA mounted on the arbor B, when unlatched from C by the magnet M. B carries a pinion engaging with a gear wheel on a weight-driven drum. Rudd recommended that the spindle B be mounted on friction rollers "to avoid the use of oil and ensure uniformity in the energy given to the pendulum; none is taken from it." When AA has given its impulse to the pendulum and has nearly completed its semi-revolution, it breaks the contact H. That constitutes the synchronizing signal, and it is to be noted that its precise point of time is dictated by the free pendulum itself. AA then comes to rest on one half of the arbor C, the other half being cut away.

We are left to assume that the synchronizing of the slave clock is satisfactory, and we are told nothing as to the nature of the contact that operates the magnet M. The two or three examples constructed by him were undoubtedly successful, but so far as I am aware no one else ever made one.

It will be remembered that the subject of synchronization was dealt with at some length in chapters IV and V. Those chapters were devoted to signals at infrequent intervals such as are transmitted hourly or daily from a source of standard time to correct or synchronize independent clocks, whether key-wound or self-wound, and it was indicated that the synchronization of a slave with its free pendulum would be treated separately, since, though the principle is the same, it differs so widely in its object.

We can easily believe that Rudd's synchronizing of the slave clock was adequate, since an approximate result appears to be sufficient. An error of only ± s·01 (one-hundredth of a second) in measuring the duration of any individual minute represents quite a considerable error in a longer period, ± some 14 sec. per day or 100 sec. per week. One of his free pendulums, provided with an unusually heavy bob, received an impulse only once every 4 minutes, and he remarks with unassailable accuracy that if the slave clock strayed to the extent of a minute a week, it would only represent an error of 1/40th sec. in any individual impulse.

I have been in danger of wearying my readers in my insistence upon the merit of occasional impulses to a pendulum instead of the tick-tock of every swing, but I must yield the palm to Rudd, who proposes quite seriously to give a push to his free pendulum every few hours or so!

It is to be inferred that the accuracy of his slave clock and its stability under synchronization is insufficient for such a feat, since he proposes to let the pendulum itself unlock the maintenance and provides a simple device for the purpose, which is illustrated in fig. 85. It is in the nature of an addition to the catch C.

A seconds pendulum will maintain its vibrations for several hours if it has a heavy bob and nothing but air resistance and the flexing of the suspension spring to impede it, consequently the magnet M may quite well be operated by the slave clock once an hour, provided the synchronization is only required to ensure that the impulse arrives when the pendulum has passed zero in its excursion to the right and before its return to zero. In this period, that is to say any time during the last second of the hour, the signal arrives and the magnet, when liberating the rotating impulse lever AA by giving C a partial anti-clockwise turn, pushes up a little trigger NS (to which the load of AA is momentarily transferred) into the path of a pin P on the pendulum, and lodges the catch C supporting the impulse lever onto the notch N, so that when the pendulum returns to the left it helps itself to a substantial impulse.

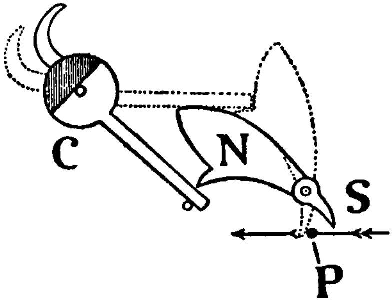

FIG. 85.—Rudd's escapement for long intervals

The fact that the pendulum itself is called upon to perform the release takes it out of the realm of free pendulums, and some would say that such rare impulses take it out of the realm of reason, but it gives one furiously to think. Rudd's invention came at a time when the profession badly needed a "jolt." The British Horological Institute is entitled to all the credit due to its publication in their journal, but it is to be regretted that not one of our famous old firms of clockmakers took hold of it and tried it out. Our horological schools are, in my opinion, open to the same accusation of lack of enterprise. The professors would have done well to set the students in every class to make a model of Rudd's free pendulum if only for the valuable lessons it would impart and the theories it would illustrate.

Rudd's seed fell on barren soil, and ten years elapsed before I found it and grafted it onto the Synchronome tree, where it was tended patiently for another ten years before the first practical free pendulum blossomed.

My readers may remember that in chapter IX I mentioned that in the year 1879 the British Association appointed a committee to consider the question of astronomical clocks, and that Sir David Gill set out the ideal as follows:

"To maintain the motion of a free pendulum in uniform arc, when the pendulum is kept in uniform pressure and temperature, and to record the number of vibrations which the pendulum performs, is to realize the conditions which constitute a perfect clock."

He made a clock that he thought would fulfil these conditions, but it turned out to be nothing more or less than a "Froment," of whose existence he was unaware. He failed to appreciate the underlying principle and greatest merit of that invention, and consequently met with contact troubles. He took the wrong road in endeavouring to overcome them and wasted his energies in following up the blind alley of delicate contacts produced by radiometer mills in vacuum tubes.

In the early years of this century, during his distinguished career as director of the Cape Observatory, he began again, and this time he attempted, with the aid of the Cambridge Instrument Company, to produce a free pendulum. No satisfactory description of this clock has ever been published and no illustration of it exists, so far as I am aware, but I quote from Sir David's official report dated February 1, 1904, as follows:

> The clock consists of two separate instruments: (*a*) a pendulum (swinging in a nearly airtight enclosure, the air in which is maintained automatically at uniform temperature, 30° C., and low uniform pressure, 30 millimetres); (*b*) the "slave clock" with a wheel train and dead-beat escapement, the pendulum of which has a period of vibration slightly shorter than 1 sec. This pendulum is "held up" by a trigger for about a tenth of a second at each alternate beat, and this trigger is discharged by the short-circuiting of its electro-magnet through the gravity arm of pendulum *a* at the instant when this arm is arrested by touching the platinum anvil that limits its fall. The "slave clock" shows the minutes and seconds and makes the electric contacts necessary for raising and liberating the gravity arm of the main pendulum at the proper instants. It also makes the electric contacts for the chronograph and the contacts connected with the automatic control of temperature and pressure. The impulse given to the pendulum depends on gravity only, and is entirely independent of the effects of any sticking or repulsion at the points of electric contact.

In the report of the Observatory for 1905 it is mentioned that some trouble occurred due to residual magnetism in the electro-magnet which discharges the pendulum of the "slave clock" at each alternate second; and in the report for 1908 it is stated that the clock proved to be unreliable, mainly on account of electrical faults, and that it had not been found possible to bring it into regular use, but that there were signs that the difficulties had been overcome.

In the meantime, however, Sir David Gill retired, and the Admiralty refused further expenditure upon costly and unprofitable experiment, so the story closes with an announcement in the 1911 report that a new clock, with airtight case and nickel steel pendulum, by Riefler of Munich, was purchased and installed in the clock chamber.

To Sir David Gill belongs the credit for coining the word "slave clock" and for putting the free pendulum in a vacuum, but in all other material respects he went astray. The accursed custom of impulse every second had him tight in its clutches, and it is interesting to speculate what would have happened had he met with Rudd, who gave his free pendulum an impulse once a minute, once in four minutes, or once an hour.

The next attempt was by the late Mr. C. O. Bartrum of Hampstead in 1913. His free pendulum was a distinct advance upon the efforts of his predecessors, since he used the Synchronome detached gravity escapement with impulse at zero to drive it and operated it once a minute, using the remontoire impulse as a synchronizing signal to control a Graham dead-beat escapement clock employed as a slave.

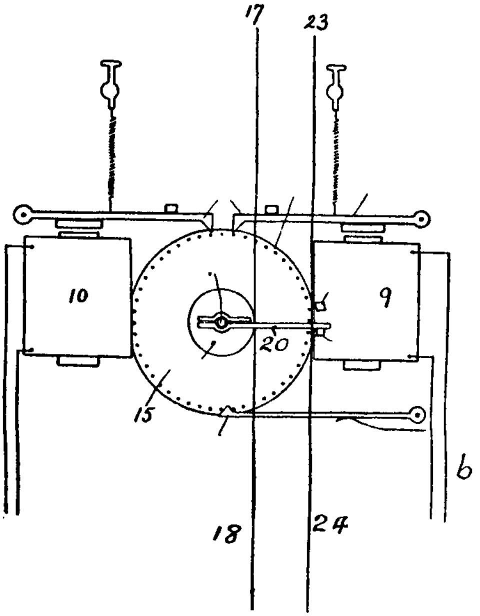

FIG. 86.—Bartrum's slave synchronizer

Each remontoire signal is shunted to a fasting or slowing magnet 9 or 10, as shown in fig. 86, operating on the capstan 15, in the manner described in my paper before the Institution of Electrical Engineers in 1910, and illustrated in fig. 24 of chapter V. But, instead of raising and lowering a collar weight on the pendulum as in mine, a silk cord 17, 18, wound on the capstan's drum, controls the rate of the slave by means of a spiral spring attached to its pendulum. As the signal does not correct or "set" the clock, this arrangement would merely rock the error, as I explained in chapter V. He also provided a supplementary spring, applied by lever 20 and cord 23, 24, by means of which an additional correction of a fixed amount is superimposed which, unlike the capstan correction, has no cumulative effect.

The contact on the slave which enables it to perform the releasing function for the free pendulum is taken from a wheel specially provided for the purpose in the same plane as the pendulum and propelled by it one tooth at each complete vibration. The wheel carries a pin on its periphery which elbows its way between two springs in the manner of Campiche shown in fig. 47 of chapter X. The indictment against this sort of thing was ably drawn by General Ferrié in the October 1929 issue of the Monthly Notices of the Royal Astronomical Society, and in the following issue I pointed out the strait and narrow way, which was of course taking the contact direct off the pendulum itself without interfering with it, without in fact letting the pendulum know that it has done anything at all!

Bartrum had not tackled the barometric error then, though he did so subsequently, and could not put his free pendulum in vacuo without reducing the switch energy to an impracticable amount. The releasing contact must of course be made by his slave clock about ¼ sec. before the remontoire contact of the free pendulum occurs, hence the function of the slave clock may be described as the measuring out of intervals of 59¾ sec.; a flywheel inertia device is provided to take care of this odd ¼ second.

That is the best way of expressing the whole principle of the employment of a slave clock to perform the releasing function for a free pendulum. Assume that the impelling lever, whether rotary as in Rudd, or a Bloxam-Grimthorpe gravity arm as in Gill and Steuart, or a Synchronome switch arm as in Bartrum, transmits its synchronizing impulse immediately its job is done; then, having decided upon the periodicity of the impulses to be given to the free pendulum, the function of the slave clock is to measure that interval, minus whatever time may be absorbed in the act of imparting the impulse.

In 1918 the late Father William O'Leary, S.J., formerly of Dublin and afterwards director of the Riverview Observatory, Sydney, dispelled the foggy atmosphere that seems to have shrouded previous inventors by the clear exposition given in his patents 2887 and 19007 and his simple mechanical method of performing the feat.

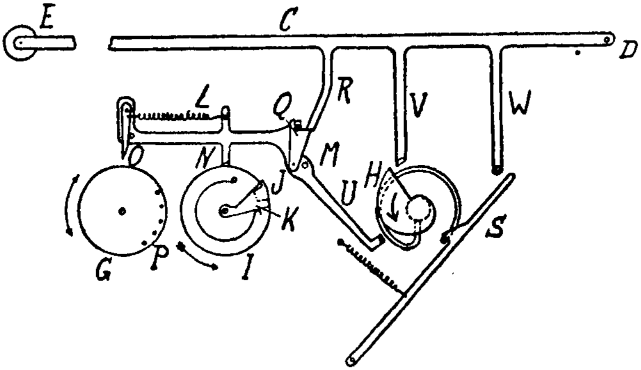

FIG. 87.—Slave clock of Father O'Leary

He made his slave out of an old alarm clock. It is given a gaining rate, and I illustrate it in fig. 87, taken from his first patent. The gravity lever C carries an impulse roller E on its extreme left end. N is a lever centred at M, normally supported upon the minute wheel I. When the end of the minute is approaching N removes the mask K and drops into the slot J, resulting in the following interesting series of happenings.

The spring pawl O drops between any two of the pins P on the balance wheel G, thus instantly stopping the clock. Q is removed from under R and allows the gravity lever C to fall with its impulse roller E on the dead surface of the pallet A on pendulum B illustrated in three positions in fig. 88. Having given the impulse to the pendulum, C falls freely, the strut W strikes S and releases a separate power train ending in the cam H, which engages U and V and raises N and C, starting the clock again, and replacing Q under R.

Thus O'Leary makes no attempt to correct the going rate of the slave to make it synchronous with the pendulum, but, giving it a permanent gaining rate as Gill did with his dead-beat escapement clock, and Steuart did with his continuously running motor, he stops it at the end of its shortened period and simply wipes out the gain by not allowing it to start until the free pendulum says "go."

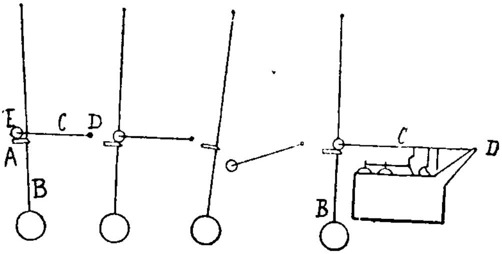

Fig. 88.—Father O'Leary's free pendulum

Messrs. Gent & Co. of Leicester (I. H. Parsons and A. E. J. Ball, patent no. 160204, 1919) accomplished the equivalent of O'Leary, but rendered it self-winding by the use of the remontoire. Fig. 89 will not require a detailed description for those sufficiently interested to trace out the action; suffice it to say that the switch is inverted, the armature being pendant. O'Leary's lever C is here represented by two levers, both of which are reset by the armature, the lower one being the main storage of energy to be imparted to the free pendulum and the upper one driving the slave clock (or "time element" as they call it) in its fall and finally releasing the impulse lever.

Most of these inventors, recognizing the difficulty of the perfect timing of their releases, hanker after the use of the free pendulum itself to determine its precise instant; but if they do so, then the pendulum ceases to be absolutely free.

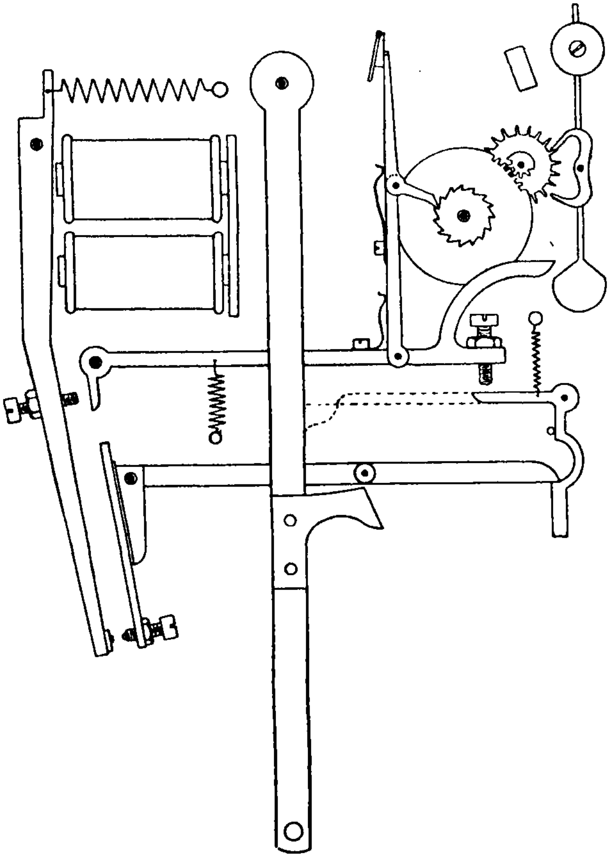

FIG. 89.—Free pendulum of Parsons and Ball

Rudd and O'Leary provided this, and its equivalent in Gent's method is here seen in fig. 89 in the dotted lines on the right of the pendulum.

I have now reviewed in chronological order the only free pendulum inventions known, viz. Rudd, Gill, Bartrum, O'Leary, and Gent, up to the year 1930, when the publication of the first edition of this work opened the floodgates. I do not propose to review electro-static or magnetic pendulum propulsion controlled by photoelectric cells. So far as I am aware, none of them has been seriously tried out or manufactured for sale, and whilst it has been my duty to be critical, I ought to add that free pendulums of any kind represent ingenuity and ability of a kind far beyond that called for by the average electric clock invention.

CHAPTER XVII

THE SYNCHRONOME SHORTT FREE PENDULUM

THE end of chapter XIV left us, Mr. Shortt and me, in a position of stalemate, but fortunately in 1921 he hit upon a means of making two pendulums swing together in *precise* sympathy, viz. the "hit-and-miss synchronizer," which enabled the coupling together of two Synchronome clocks so that one, the slave, would accomplish the release of the gravity arm of the other, the master. He placed a vertical leaf spring L on the pendulum D, fig. 90, and a horizontal armature A, pulled downwards by an electro-magnet M, in the half-minute circuit of the free pendulum's remontoire. The slave pendulum D was given a small permanent losing rate so that when as a result of this rate the point of the vertical spring was late in arriving at armature A, it was caught and deflected, thereby quickening that semi-vibration, since the spring adds to the force of gravity. Its tension is such that the advance effected is twice the loss (due to the losing rate) during the interval between two impulses, with the result that the engagement takes place approximately at every other swing, hence the term "hit-and-miss."

The idea was entirely original so far as Mr. Shortt was concerned, and he secured a patent for it dated September 30, 1921; although Mr. W. S. Hubbard (jointly with Messrs. Parsons and Ball) had already applied for a patent (June 1920) which contained a somewhat similar idea, the armature taking the form of a rack with a view of varying the amount of synchronization.

An earlier patent, no. 160988 of 1920, taken out six months before, appears to be the stepping-stone which led to the final solution, and I reproduce in fig. 91 an illustration from it.

The pendulum A carries an armature B on the end of a

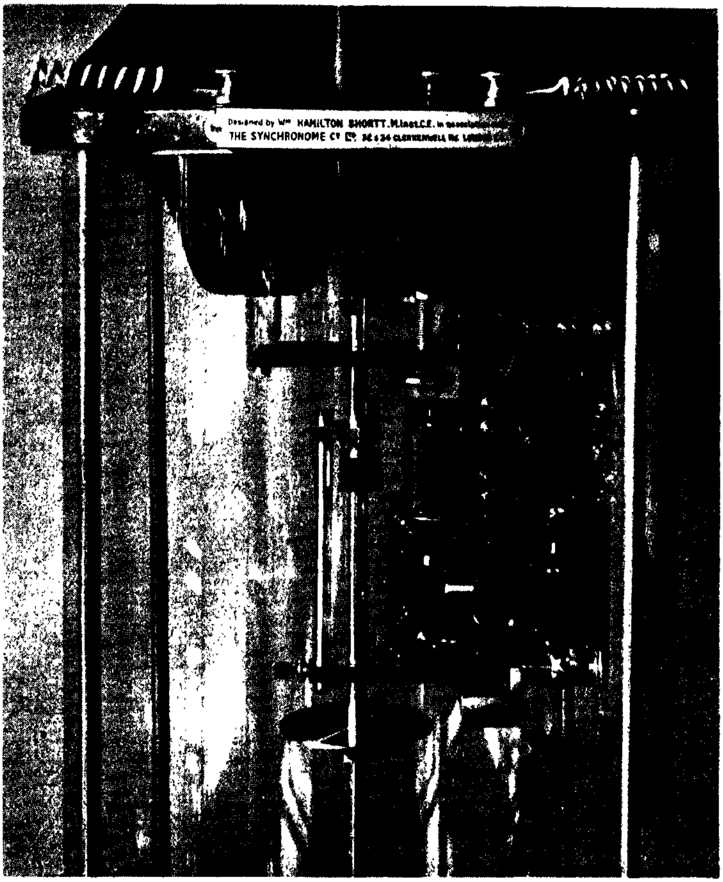

THE SHORTT FREE PENDULUM; DETAILS OF IMPULSE MECHANISM

spring B2. The magnet C is in a half-minute time-circuit, and is so placed as to be just over the armature when the pendulum is at or near the end of its swing to the left. If the pendulum is fast, it will be returning when the half-minute impulse arrives, and checked and delayed by friction when the armature is gripped; and if the pendulum is slow, the check it receives will quicken it.

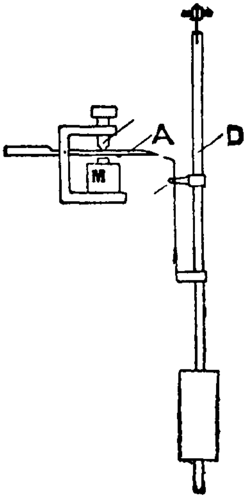

FIG. 90.—Shortt's hit-and-miss synchronizer

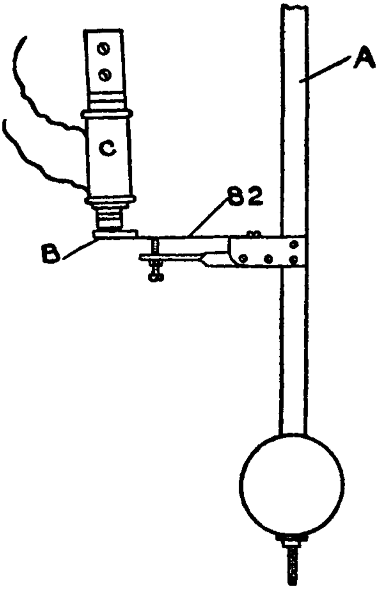

FIG. 91.—An early form of Hubbard's synchronizer

His next patent (No. 167060), in association with Messrs. Gent & Co. of Leicester, has, I hope, enabled him to reap his reward in the commercial application of the idea, represented by the "Reflex" control of time recorders. In fig. 92 A is the leaf spring on the pendulum B of the slave clock, and D the electro-magnet in the half-minute circuit. The sloping end of the armature C1 is provided with saw teeth, so that the amount of correction will be proportionate to the error as the engagement takes place earlier or later.

Mr. Shortt, on the other hand, as will be seen from his patent no. 187814, relies entirely upon a "hit-or-miss" action combined with a losing rate for synchronizing since with the free pendulum the slave must be kept in exact step with it.

I rank this invention as one of the very few of outstanding importance in the applications of electricity to horology; it was the last thing needed to produce a practical free pendulum, since it enabled two Synchronome clocks to be firmly held in synchronization.

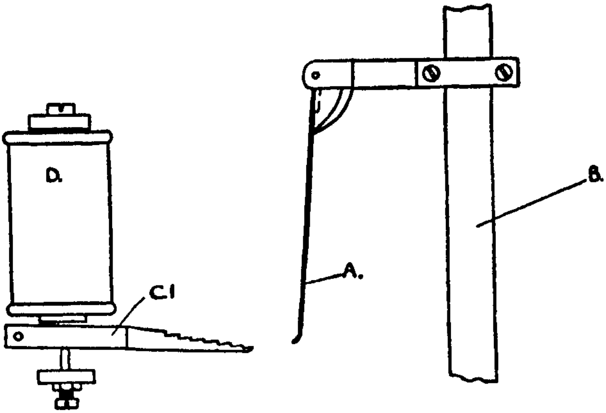

FIG. 92.—The "Reflex" synchronizer of Hubbard, Parsons and Ball

The first free pendulum clock embodying this synchronizer was made by Mr. Shortt with his own hands and was erected by him in the Edinburgh Observatory at Christmas time 1921, the free pendulum itself being in a cylindrical copper case from which the air was exhausted. It is known in the astronomical world as SH.O., and the report of Professor Sampson upon its first year's run created a sensation. Fig. 93 is a wiring diagram showing the electrical connections between the free pendulum and slave.

The Edinburgh clock was not in the simple form shown on the left-hand side of fig. 81 and the impulse was actually given below the bob, but the slave clock on the right was identical, being the ordinary standard Synchronome master clock.

On looking at the free pendulum on the left, two levers, G^1 and G^2, will be observed, each performing its separate duty of (G^1) impulsing, and (G^2) switching, thus disassociating the two functions usually performed by one lever in the Synchronome switch as we have seen in fig. 81, page 137.

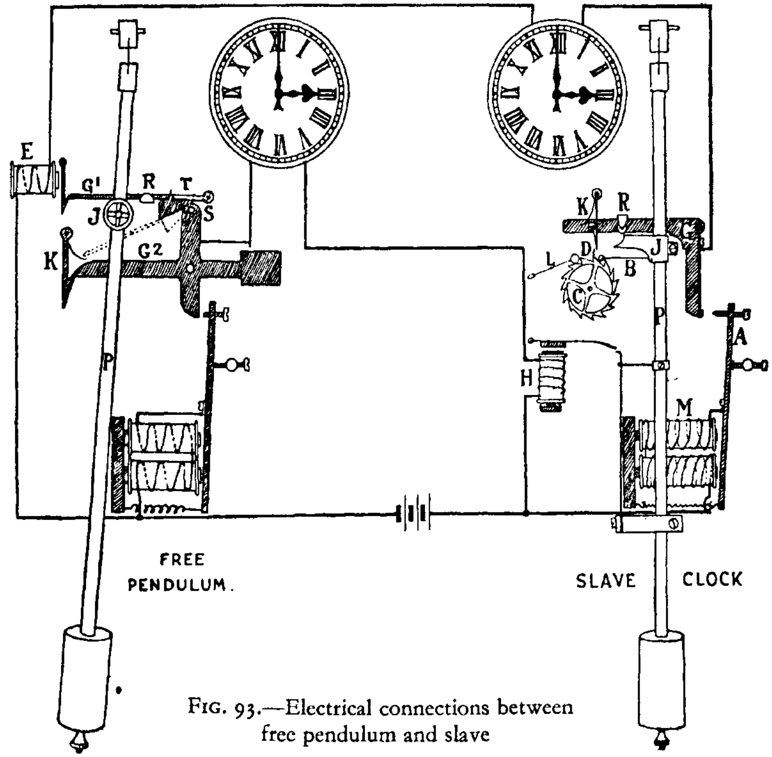

Fig. 93.—Electrical connections between free pendulum and slave

When the slave clock operates magnet E and releases G^1 the free pendulum is on its way to zero on its excursion to the left. The jewel R having fallen onto the top of wheel J, the impulse begins with extreme gentleness when the left-hand corner of the jewel R runs down the periphery of the wheel J and terminates when it drops off the wheel. G^1 then falls upon the wing of catch K and releases the switch arm G^2, which in falling gently replaces the impulse lever G^1 on to its catch by means of the arm S and cam T.

The considerable time that elapses between the release of G^1 by magnet E and the operation of the remontoire which replaces G^2 can now be realized, and it amounts to about 8/10ths of a second, during which period the slave pendulum, which was a little beyond zero on its excursion to the right, completes its swing in that direction and returns to zero in time for the *act of comparison* which determines whether or not *correction* is required. I state it as a law that comparison should take place at zero in order to secure accuracy, just as impulsing must in order to secure minimum interference. On the other hand, the correction should be effected whilst the pendulum is swinging out and home in order to obtain maximum effect.

Thus the slave pendulum measures just a very little more than 29·2 sec. of time, and the subsequent operations absorb the remainder of the half minute. The excess of the first period over 29·2 sec. varies within the known limits permitted by the hit-and-miss synchronizer, which limits are usually of the order of 1/200th of a second. The second period is mainly absorbed by the impulsing of the free pendulum and the operation of the remontoire mechanism, and its duration is a little less than 0·8 sec. Whatever it is, it is constant if the arc is constant. These two periods may be said to *overlap*, the amount of the overlap being represented by the difference in the relative positions of R and J when the release takes place, since the position at which the impulse actually begins is invariable. The variation of the amount of the lateral run of the dead flat underside of R on the top of the wheel J is something less than 0·01 mm. (An enlarged view of the impulse wheel and gravity arm is given in fig. 94.)

In dealing with such extremely small quantities of time and space it is essential that the electrical contacts derived from the two pendulums should be precise in their timing. For such purposes contacts applied to wheelwork would be altogether too uncertain and irregular. In the case of the slave clock, for instance, it would be futile to put a pin in the periphery of the 15T wheel to engage a spring in passing.

I promised in the Introduction that I would describe the free pendulum. I need not apologize for having taken half of this book to carry out my pledge, since it has been necessary to lead up to it by a review in chronological order of most of the inventions in electric clocks of which anyone has ever heard.

It is astonishing what a large number of these inventions have turned out to be futile, but I have described them all because there are lessons to be learned from failures as well as from successes. It has in fact been my aim to be analytical and critical, to distinguish between good and bad, to find reasons for the disappearance of those that have faded out, and above all to recognise intrinsic virtues wherever they existed.

The successful free pendulum is based upon the use of certain fundamental principles whose origin and importance have been revealed during this process of review. An entirely new standard of accuracy in time measurement has been set up, and I propose in this chapter to reconstruct before your eyes the clock that has achieved it, using these principles as our building materials.

Who first conceived of the idea of a free pendulum? That is to say, a pendulum which synchronizes another clock and uses that clock to perform the escapement function for it. The answer is R. J. Rudd in 1898.

He expressed himself in mechanism rather than in words; he gave no reasons, he enunciated no principles, but he made a free pendulum which worked, and some of the means he adopted were fundamental essentials. For instance:

(1) He gave the impulse to his pendulum rarely, such as once a minute, instead of every second or every other second. He appears to have had no particular reason for so doing, except the obvious one that his pendulum did not require more.

(2) He delivered the impulse to the pendulum when it was more or less at zero, and

(3) the arm that delivered the impulse, having completed its job, transmitted a synchronizing signal to the slave clock.

One always regrets that Rudd's invention which contained these three essentials was never tried out and developed. Whoever did so would have found that he was up against the necessity of improvements in

(*a*) the impulse, since Rudd's rotating arms involved storage of power in a train of wheels that, however short and frictionless, could not be as constant as a single lever; and in

(*b*) a more reliable and perfectly timed contact in the slave clock to release the free pendulum's impulse;

(*c*) more precise synchronization of the slave.

With regard to the others, Sir David Gill lacked nos. (1) and (2). He had No. (3), which gave him a precisely timed contact, but it was worthless since it lacked energy.

Mr. C. O. Bartrum had (1), (2) and (3), but like Rudd he was deficient in (*b*) and (*c*).

Father O'Leary and Messrs. Gent had (1), (2) and (3) (mechanical), and the difficulty (*b*) did not arise, since their release was mechanical, but it was not good enough.

The successful free pendulum, known to astronomers as the Shortt Clock, has (1), (2) and (3), together with the necessary (*a*), (*b*), and (*c*) improvements, since these features are fundamentally in the Synchronome switch, and some further comment upon them is desirable.

(1) *Occasional impulse* is demanded by two considerations of overwhelming importance. First, the giving of an impulse to a pendulum, however careful we may be in the mode of delivering it, and the precise point in the phase of its vibration at which we impart it, is nevertheless an *interference*. The less time this operation takes relatively to the total time measured the better, and the more the pendulum is free. In the Synchronome free pendulum it is in the ratio of one in 100; in ordinary escapement clocks it may be anything from 50 in 100 to 100 in 100, as in the Grimthorpe gravity escape-

ment where the pendulum is never free. It is no answer to say that the same amount of energy has to be imparted in any case, viz. that which is necessary to maintain the vibrations of the pendulum at the arc desired. The suggestions that 30 small instalments are as good as one of 30 times the value will not hold, as I emphasized in chapter X.

Secondly, since it is essential that no energy shall be taken from the free pendulum for the purpose of making contact, it follows that a switch of the Synchronome type must be used, and one of the peculiar merits of that device is that the whole of the energy required to drive the pendulum (that is to say, the energy required to replace the gravity arm) is transmitted through the surfaces of the contact. As explained in the above chapter, this energy for the purposes of a reliable switch is worth its weight in gold, and we therefore multiply it by 30 by making the lever heavy enough to require its use only once every half-minute. Even then the energy is not sufficient for our purpose, so when the lever has delivered its impulse to the pendulum we call upon it to release a far heavier lever loaded with considerable mass, so that when it falls into contact it does so with a pressure which cannot fail.

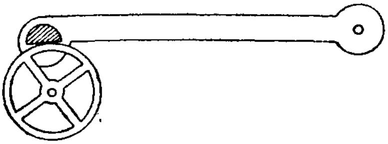

FIG. 94.—The free pendulum's impulse

(2) *Position of impulse.* Fig. 94 shows how the half-minute impulses are imparted to the free pendulum.* The gravity arm G^1 carries a jewel R at its free end, and J is the impulse wheel on the pendulum which receives R when it falls. The lever G^1 is released by the slave as the pendulum, and therefore the wheel, is approaching zero from the right, and the wheel is not always in precisely the same position when the jewel falls upon it. But the impulse always begins before zero in exactly the same place and begins with extreme gentleness

---

* See fig. 93, page 165, for reference letters.

in the descent of the jewel on the periphery of the wheel, and it finishes after zero at a point determined by gravity alone, since it drops off the wheel as described in the *British Horological Journal* of January 1906.

(3) *The Synchronizing Signal.* This is one of the most important and most ingenious of the inventions which have made the free pendulum possible. It always puzzles a layman, and even the technical horologist, to understand how a free pendulum, which is really free and is not permitted to make an electrical contact, can communicate a synchronizing impulse to a slave clock. The explanation of the apparent paradox lies in the fact that the free pendulum receives its impulse from a falling lever or gravity arm and that, whilst the point of time at which the lever falls on the impulse pallet is dependent upon the ability of the slave clock to measure the intervals with precision, the time at which the impulse is completed is dictated by the free pendulum itself and is communicated to the slave by means of a synchronizing signal resulting from the falling away of the lever after the impulse is finished.

CHAPTER XVIII

THE PRINCIPLES OF THE FREE PENDULUM

THE horological text-books are full of information and advice as to how to build precision clocks, but most of them forget to remind us of the principles underlying their construction.

They discuss escapements in detail and frequently with enthusiasm without confessing as they should on every page that escapements involve almost continuous interference with the pendulum, and they are at best an unsatisfactory means of impelling it. The science of horology may be said to exist to mitigate these evils, but you would never think so from reading books on clockmaking, since they rarely mention them.

As recently as the year 1920 a correspondent in the *British Horological Journal* asked for "the best specification of a seconds pendulum clock capable of keeping the closest rate, and whether it should be electric." He was given the following answer:

> Barrel, 2 in. diameter; great wheel, 168; centre wheel, 120; third wheel, 98; 'scape wheel, 30. Pinions of 14, all hardened and tempered, escapement, Graham dead-beat, embracing eight teeth. Pallets, jewelled sapphire. Mercurial pendulum. Suspension spring, short, broad, and thin. Maintaining power must be fitted. Line to be of silk, and, if possible, carried over loose pulley to hang down side of case. Jewel holes should, for preference, be supplied to 'scape wheel and pallet holes. *We do not advocate an electric clock for this purpose.*

Faultless advice, endorsed by all the best of the good old English hierarchy of clockmakers, but apt to raise a smile on the faces of the astronomers who had before the war substituted Riefler's clock (see page 55) for their Graham dead-beat clocks in most of the world's observatories. Perhaps the editor ignored Riefler on the ground that his construction would be beyond the powers of the ordinary clockmaker. But what about the Graham steel and mercury compensation which became obsolete when Dr. Guillaume of Paris produced Invar in 1904? And what about the weight-driven train, proved to be unnecessary not so much by the Synchronome invention of 1895 as by Riefler's adoption of it when the German patent ran out?

This incident serves to remind us of what we may call the official attitude of the watch and clockmaking profession towards electric clocks up to the introduction of synchronous motors taking time from the Grid in 1935. It serves also to remind us how they had accepted the weight-driven regulator with the Graham dead-beat escapement as being the last word in precision timekeeping and how escapements have dominated horology for two hundred years. We have never been able to get away from them, our orbit has been bounded by them, and they have produced a mental atrophy that has blinded us to the possibilities of doing anything better.

In a man it is his principles that count; his character is built up of them. So it is in the free pendulum clock we are describing. Let us avoid absorption in details of wheels, pinions and escapements, and devote a chapter to principles. They are the real building materials used in its construction.

It is not easy to give them an order of relative importance since they are all vital, but we may select as our foundation-stone *the transmission of energy through the surfaces of the contact.* The stone which was set at naught of the builders is become the head of the corner. Froment, whose contact device first contained it, was unaware of his achievement or its merits, and the horological press of two continents has ignored it, yet the use of this principle gives us a reliable contact without taking any energy from the pendulum.

Perhaps next in importance is the *control of the duration of the contact by self-induction,* resulting in compensatory action and all the blessings that flow from it, such as battery warning, the uniform wave shape of every impulse, and the security that every electro-magnet in the series circuit shall develop the ampere-turns necessary to enable it to do its work.

Then we have the *sailing into contact at the speed of the moving pendulum*, quick enough to ensure that there be no preliminary sparking, yet not quick enough to cause a bounce; and the *momentum break*, the cleanest and most rapid method of separating a contact that one could wish for.

Other useful bricks are the *exactitude of the timing of the contact*, the *impossibility of stopping in closed circuit*, and the *facility for advancing a group of electrical impulse dials* in minimum steps of 2 sec.

Then there is that stately group of purely horological masonry, the site for which was cleared by the demolition of the clock wheels and escapements entangling and interfering with the pendulum all the time.

Its foundation-stone is the Synchronome remontoire with its *detached gravity escapement*, provided by a constant weight falling a constant distance every half minute, giving uniformity of impulse imparted with extreme gentleness at first, then growing in its force until reaching its *maximum at zero*. Also the concentration at the zero position of such other interferences as exist and the *freedom of the pendulum* at the ends of its swing.

Such were the materials that were used in the construction of the Synchronome master clock, or electric time transmitter, and at this stage we may expand our metaphor to bring in Mr. W. H. Shortt as the master builder who added the keystone to the arch by connecting two of them with his Synchronizer, thus freeing one pendulum altogether and enabling the other to perform its escapement function for it.

The application of these principles has reduced the external frictions to the absolute minimum, and the stages in the process are well illustrated in fig. 95, a diagram prepared by Mr. Shortt (on the same lines as fig. 82, p. 138, chapter XIV), which represents the relative amounts of energy required, (1) the shaded portion, to maintain the vibrations of the pendulum against air resistance and *in vacuo*, and flexing its suspension spring, which is the same in both, and (2) to overcome the external frictions. The latter is shown in the unshaded portions of the columns.

It will be seen from the left-hand half of the diagram that when the pendulum is swinging in air at ordinary pressure the worst arrangement is to deliver an impulse below the bob every second; that considerable improvement is effected by reducing the frequency of the impulse to one every 30 sec.; and still further improvement by giving the impulse near the top of the pendulum.

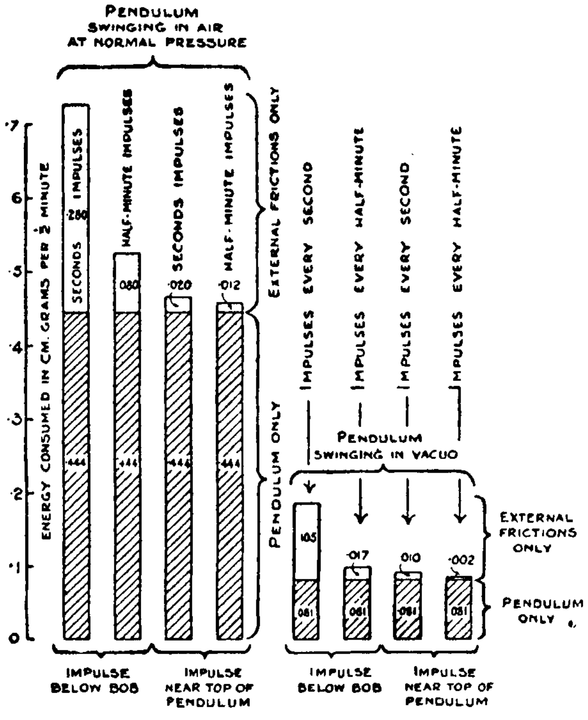

FIG. 95.—Energy required to keep a pendulum swinging

When the pendulum is swinging *in vacuo* the effects are even more pronounced, owing to the reduced amount of energy required by the pendulum itself and the greater relative importance of external frictions.

The last column on the right shows that almost the only impediments remaining are the inevitable obstructions of air resistance and the flexing of the spring. When the air pressure is reduced to three centimetres of mercury the energy dissipated in overcoming its resistance is about equal to that consumed in flexing the spring, and together they amount to 0·081 centimetre-gramme per half-minute. Mr. Shortt estimates the remaining external frictions as follows:

(1) Sliding and rolling friction between the impulse jewel and the impulse wheel	0·0004
(2) Pivot friction of wheel	0·0015
(3) Energy stored in wheel after impulse by virtue of its spin	0·0002
	0·0021

Thus the only losses that have to be made good amount to 0·0831 centimetre-gramme per half-minute, and they are supplied by a weight of 0·415 gramme falling 2 mm., or about one-eighth of a ft.-lb. per week.

The delivery of this impulse increases the amplitude of the pendulum's swing by 4 sec. of semi-arc—an amount that can of course be observed only with the assistance of a microscope. At the end of each half-minute the arc will be found to have fallen by that amount.

According to my very human intelligence the use of the above principles as proved and tested building materials, with adequate precision of workmanship, should produce a perfect clock. But perfection is a word that all men of science dread, and it has not yet been attained, though it has been necessary to put the performance of these clocks "under the microscope" in order to discover any error at all; and anyone with a lifetime's experience of the best astronomical clocks hitherto known would say, as the late Professor Willem de Sitter of Leiden said when he first saw the record of the free pendulum at Greenwich Observatory in 1927, "Its rate is absolutely invariable."*

Yet it is by no means perfect. Changes of rate do occur and though so small as to be almost undiscoverable in their early stages, they exist and until we can find the causes of these variations we cannot rest content. It is ordained that perfection shall be elusive and since the joy is in the chase rather than in the achievement, we shall not rebel if the golden apple is held just beyond our reach. A song of triumph would be inappropriate and we must realize that all we have done so far is insufficient. May those who follow me take care to inform themselves of what has already been accomplished and adopt an attitude of humility as I do, and realize that *it is not enough* that we have removed all interference with the pendulum excepting only that involved in giving impulse to it, because we have to admit that owing to human imperfections the impulse is not absolutely invariable (although the most invariable thing we can conceive of, viz. a constant weight falling a constant distance).

It is not enough that we have reduced the period during which interference takes place to one part in 100 of the time measured by giving a concentrated impulse every half minute instead of a prolonged one every second, although this enormously reduces the proportion of the one variable element—pivot friction.

It is not enough to divide this force by *five*, which we do by putting the pendulum in vacuum, incidentally removing every kind of barometric error.

It is not enough that we perform the self-winding, switching and time-counting operations with a certainty and a precision that are unassailable and will build up unbroken records for ten years at a stretch without stopping.

It is not enough to apply the impulse to the pendulum at such a point in its path that its variations will not affect its timekeeping, the clock being innocent of anything in the nature of escapement error, because variations of arc will

---

* Supplement to *Nature*, 1928, January 21 (see p. 204).

occur (albeit discoverable only by a microscope), and variations of arc bring in the circular error.

But what more can one do? The further a science advances, the more difficult it is to contribute an improvement. I am not at all sure that greater precision can be achieved from a pendulum clock but if any of my readers has some device which he thinks is an improvement upon the free pendulum above described he should not attempt to interest people in the invention and seek assistance in its development, manufacture, and sale until he has satisfied himself that he has done all these things and something more, without transgressing the horological laws. I speak humbly as one who solicited such help in his youth but never found it, and did not then deserve it.

I came to the conclusion regretfully at the close of the nineteenth century that the famous old firms of London clockmakers whose names were household words had lost all interest in the scientific side of their craft. They were the inheritors of the great traditions established by the fathers of clockmaking in the eighteenth century and their names were honoured throughout the world. Perhaps the pressure of economic conditions tended to commercialize them until, in some cases, they have become little more than distributors of factory made clocks, watches and silverware.

CHAPTER XIX

CIRCULAR ERROR

It was frankly admitted at the end of the last chapter that the free pendulum still fell short of perfection. Small changes of rate occur unaccountably and it was noticed that they were usually associated with variations in the arc of the swing. The connecting link between these two phenomena is the "Circular Error" and it demands a chapter to itself.

What is this "circular error"? We have been accustomed to assume that the time-keeping of a pendulum is independent of the arc of its swing. We think of Galileo and his tests of the time of vibration of the candelabra of Pisa Cathedral against his pulse and his discovery of the apparent isochronism of the pendulum. But we must remember that Huyghens, following him, investigated its mathematics and proved that, to be truly isochronous, it should swing in an epicycloid and not in a circle. The circular error is the difference in time of swing resulting from the pendulum following a circular path. It takes longer to swing a large arc than a small one. The time difference between a long and a short swing has hitherto been considered negligible in the science of horology, but now that we aim at, and frequently achieve, an accuracy of one part in a hundred million, it must be taken into account. It is least in the smaller arcs and that is one reason why we only give the free pendulum a total arc of from about 1½° to say 100 minutes. In fig. 96, the semi-arcs covering the range in which we are interested are shown on the base-line from 48 to 58 minutes (semi-arc), and the vertical scale shows the increase in slowing rate that would result from increase of arc.

The time difference resulting from a change of semi-arc of any minute may be read directly from the graph and seconds of semi-arc are also given in an inset panel. The time readings are shown in plain figures representing thousandths of a second per day.

It is difficult to see why there should be any variation of

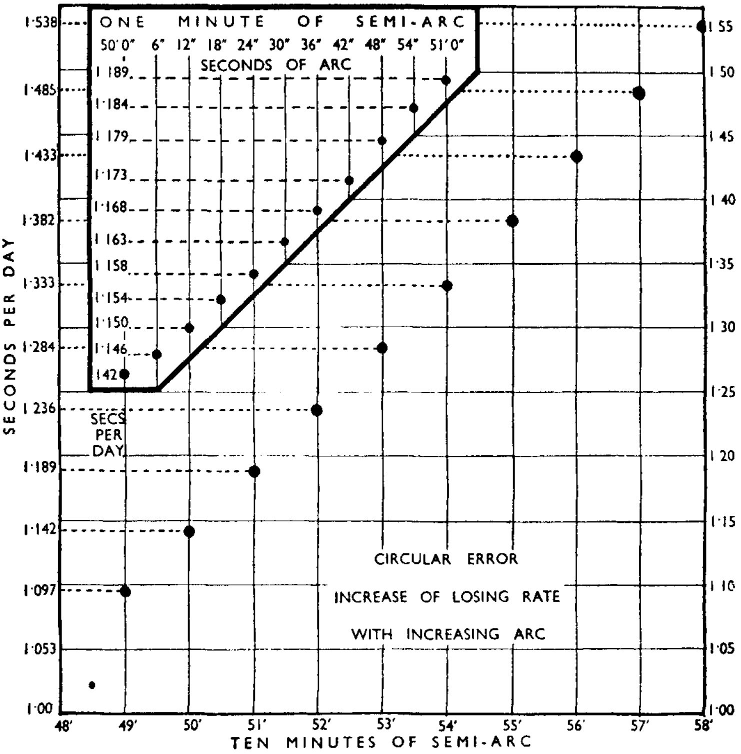

FIG. 96.—Circular error

arc when the pressure in the case remains the same, i.e. exhausted to about ¾ in. of mercury, inasmuch as the impulse is imparted by the fall of a lever providing a constant weight falling a constant distance and acting upon the pendulum at identically the same phase position every time; yet changes of amplitude do occur which, according to Professor R. A. Sampson, the then Astronomer Royal for

Scotland, have amounted occasionally to 6 sec. in the semi-arc, causing a change of rate of 0·005 sec. per day.

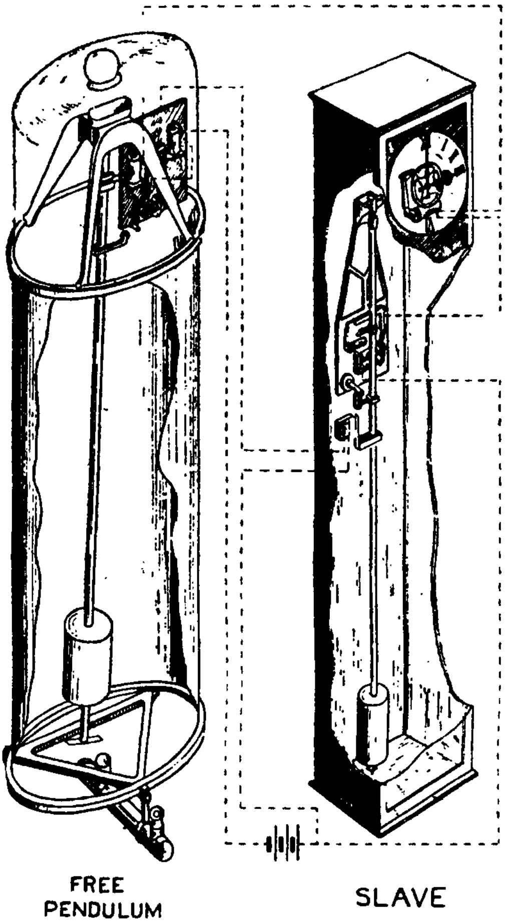

Fig. 97.—Free pendulum and slave

A variation of only 0·01 mm. in the excursion of the bob or 2 secs. of arc will by circular error alter the rate by 0·00145 sec. per day, as we can see from the graph (fig. 96), and if it arose unperceived and was steadily maintained it would produce an accumulated error of half a second in a year, so the necessity for this close observation is obvious.

The Synchronome free pendulum is illustrated with its accompanying slave clock in fig. 97, in outline perspective drawings cut away to reveal the works. The beat plate is fixed face downwards on the extreme bottom end of the pendulum. It is read with a microscope through the plate glass panel which constitutes the floor of the case. By this means it is possible to read to within the *2 sec. of arc, or one hundreth part of a millimetre* above-mentioned. A still greater magnification is obtained by the method illustrated in fig. 98.

Until the causes of these minute variations in arc are ascertained and cured they must be carefully observed and recorded, and their effect in circular error allowed for. That is what Dr. Jackson and Mr. Bowyer did at Greenwich, and they recounted their observations in an article which appeared in the January 1930 issue of the *Monthly Notices* of the Royal Astronomical Society.

They summed up their investigations on the free pendulums at Greenwich Observatory for the five years 1925–30 in these words: "All other errors having been eliminated or evaluated, we can watch the arc microscopically and apply a correction for the circular error."

Dr. Jackson found that by applying the appropriate correction for circular error to the past performance of the clock its variations were smoothed out almost into a straight line.

This led to an ingenious proposal by Mr. A. L. Loomis for the automatic compensation of arc. He arranged that a very small increase of arc in one of his free pendulums should screen a ray of light and permit a photo-electric cell to short-circuit the releasing magnet, and thereby cheat the pendulum of an impulse.

Dr. J. Hamilton Jeffers of Lick Observatory, California, also took this matter up where Dr. Jackson had left it in 1930. He devised an ingenious method of recording the arc photographically every six hours, the operation being entirely automatic.

The essential features of his device, simplified for economic construction, are shown in fig. 98. It is designed to enable a photographic plate to record 120 arc readings for one month, one reading every six hours, four per day. Since the arc is magnified to about four times its normal, examination under a micro-comparator gives a reading accurate to 1/10th of a second or arc, or 0·001 of an inch.

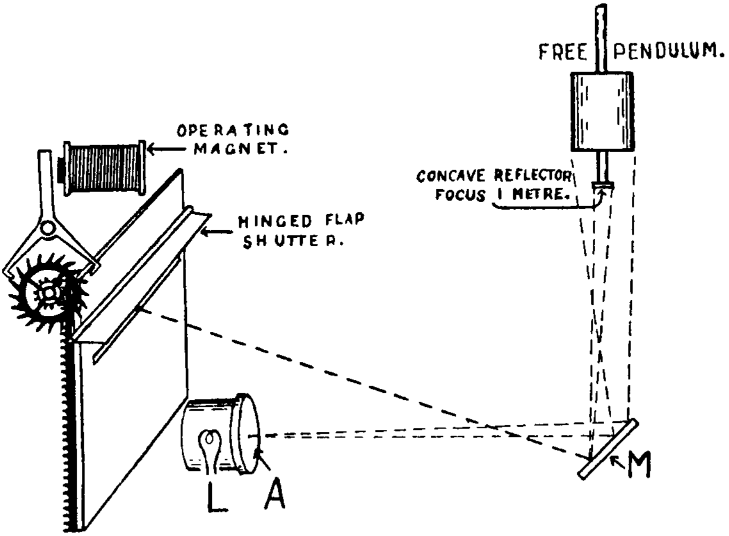

FIG. 98.—Arc recording by Dr. Hamilton Jeffers, of Lick Observatory

L is a lamp of small candle-power boxed behind a pinhole A. The beam is reflected to the vertical by the mirror M set at an angle of 45° into the path of a small concave mirror carried by the pendulum. This mirror has a focal length of one metre and returns the beam as a small spot of light which will pass backward or forward through a horizontal slit on the front of a plate-holder "in camera." Once every six hours the slave clock closes a circuit for half a minute, which simultaneously drops the photographic plate 1/20th of an inch, opens the shutter and switches on the lamp L. At the end of the half minute the light is switched off, the shutter is dropped and the plate remains where it is.

This ability to isolate the circular error and to apply its theoretical calculated effect as a correction to the rate of the clock implies the elimination of practically all other sources of variation, or at any rate the identification and measurement of whatever residual causes of irregularity may remain, such as the secular growth of the rod and its temperature error.

It is only by means of this prolonged and critical study of the performance of the clock that it has been possible to analyse these residuals and allow for them, but when we have done so, variations of arc give direct readings for correction of rate.

This is a notable advance, not so much in the going of the clock as in the understanding of its performance.

None of these small residual causes of irregularity could be diagnosed in an ordinary clock; they would be completely masked by escapement errors. This success of the analysis at Greenwich was born of faith in the free pendulum and its freedom from all the ills that clocks are heirs to, and this faith is growing.

But until we can find the cause of these minute variations of arc we cannot rest content. Shall we accept these minute unexplained residuals of the order of 0·005 sec. per day as representing inevitable inherent errors of time determination, or must we blame the clock?

Of course it may be that they (of the order of 0·005 sec. per day) are the result of equally minute disturbances in the surface of the earth itself. Seismologists have discovered that apart from earthquake waves there are trains of waves constantly traversing the surface of the earth, called microseisms, with periods varying from about 4 to 7 sec. and an amplitude of a few thousandths of a millimetre.

Seismographs show also that on most sites there is a constant change of level due to variation of the moisture content of the soil, and particularly to the effect of sun on the building in which the instrument is housed. Any such change of level would be equivalent to putting a pendulum minutely out of beat.

The quartz crystal clock should give us the answer, since it is unconcerned with variations of gravity and does not even require a rigid fixing. In the meantime and until science gives us a reason the clockmaker must take the blame.

When making small alterations in the rate of a free pendulum by varying the pressure (thus avoiding the necessity of breaking the seal of the vacuum case) it must be borne in mind that extraction of more air—i.e. a reduction of pressure, itself a cause of *acceleration*, also results in an increase of arc which *retards* as we have seen above.

These effects compensate one another at a pressure represented by $\frac{3}{4}$ in. of mercury, and that pressure is adopted as the normal so that unwanted and accidental variations in it shall not affect the rate.

CHAPTER XX

THE FREE PENDULUM IN TIME DETERMINATION. CHRONOGRAPHS

Before we discuss the performance of the free pendulum and its contribution to astronomy a preliminary word is necessary as to the way in which an astronomer uses a clock, its place in the process of time determination, and the method of comparing it with the *speed of rotation of the earth*, which is our ultimate standard of time. We use the earth as the clock by which we check the free pendulum, and we have to assume that its speed is constant if only for the reason that you cannot conveniently compare the rate of two moving bodies without assuming that one is regular and is capable of being represented by a straight line—a datum line against which the variations of the other can be plotted.

The comparison is made in the first place by means of a chronograph consisting of a moving paper chart on which pens are deflected by electro-magnets. One set of deflections or dashes or dots made by one pen represents the beats of the clock, and the other pen records the star transits. The distance between the records can be compared at leisure on this chronographic record and a time chart prepared. It used to be assumed that the star transits were correct, or sufficiently accurate to justify their acceptance as a straight horizontal datum line representing zero time, with seconds divisions above and below in which are plotted the errors of the clock, fast or slow, day by day.

It will be obvious that this method debits the clock with the whole blame for whatever differences appear. If the astronomer made a mistake of say a quarter of a second in pressing the button when one of the so-called "clock" stars crossed the spider's web in his telescope, the method we have described would automatically debit the clock with the error.

Human frailty and the mechanical imperfections of the telescope and its mountings combine to undermine the accuracy of individual stellar observations, but these imperfections were not apparent until the clocks were improved.

Realization of this was slow. The astronomers began to suspect it and to meet it by averaging a number of transits before ruthlessly debiting the clock with all and every difference between it and so-called "Time," that is to say, the astronomer's daily report of the completion of one revolution of the earth, and allowances were made for the difference in the "personal equation" of observers in the effort to "smooth out" the clock rate. A laudable effort, but often a dishonest expression when used to conceal the astronomer's growing respect for the clock and doubts of his ability to criticize it. It was not until early this century that a truer sense of proportion and relative accuracy in the processes of time measurements began to assert itself.

From 1911 onwards, when the late General Ferrier established the service of rhythmic signals, or the "time vernier" transmitted from the Eiffel Tower at Paris,* wireless telegraphy compared with instantaneous and irrefutable accuracy the time determinations of distant observatories and put its unerring fingers on the weak spots in our existing methods. It was realized that there are three essential elements in time determination—transit observations, the clock, and the chronograph—and that they require tuning up to meet modern requirements.

Just as improved shell-resisting armour produces a bigger gun, and the bigger shell is met by thicker plate, so the improvement in any one of the processes in time measurement demands a corresponding improvement in the others and reacts upon itself.

---

* Sixty-one beats are transmitted in each minute (usually for 5 minutes in succession). When comparing with a seconds beating clock, note the time of the coincidences.

Unaided transit observations, coarse in detail but accurate in bulk, were all we had to check our clocks by: then wireless time signals arrived, and by revealing discrepancies in the time determinations of distant observatories made both the transit records and the clocks look rather foolish.

The means of comparison surpassed the instrumental accuracy of clocks and telescopes, and the chronographs on which they were recorded. That horse shot ahead in the race and seems destined to remain in front in the field of science, since wireless rhythmic signals are equal to present requirements. In the meantime the introduction of the "impersonal micrometer" greatly improved transit observations and left the clocks a bad third. This semi-automatic method was originally invented by John and Alexander Herschel in 1871, but we had to wait until Repsold introduced it early this century. Since then the accuracy of transits has been greatly improved at Greenwich by the use of reversible transit telescopes, and still more so by stellar photography, notably by Captain J. F. Hellweg, who brought a zenith tube into regular use at the United States Naval Observatory at Washington in 1937.

You have seen the clock advance and, if you have not experienced some of the thrills of the Derby or the Grand National whilst watching its sudden dash to the front, then I have failed to impart the spirit of the chase. I have always said that the reward lies there rather than in the achievement. "Things done are won; joy's soul lies in the doing." Precision time-keeping has so far improved that the unit for checking the rate of the clock, which in pre-war days was 1/10th sec. per day, is now 1/1000th sec. per day.

It follows that it adds greatly to one's confidence if two or more free pendulums can be set to run together and frequently compared. When you have two clocks running for some months within 1/100th of a second of each other, you can confidently repudiate the suggestion that they are both wrong, and the individual transit observation accepts the blame.

Such comparison of the clocks must be carried out with a degree of accuracy distinctly greater than the error it is required to reveal. The change of rate to be looked for in a Shortt free pendulum clock in any one day is of the order of 2 or 3 thousandths of a second, and no ordinary chronograph can be expected to handle such a small space of time. Relays and pen magnets require great care to achieve a constancy in lag of the order of 0·01 sec.

The speed of the chronograph chart being known, the spaces between the marks are the measure of time elapsing between the events. The limitations of this method are obvious; such small intervals of time can be measured only by reeling out the paper at a high speed, and that implies an enormous consumption of stationery. The only continuously moving element is the paper.

This horse has dropped far behind in the race, and you will need your field-glasses to see it coming round the bend.

At this point in our story, the reader may well ask, how can it be stated as a fact that the vagaries of a free pendulum are so small, and how has it been possible to measure them in thousandths of a second?

Two things are necessary—first, to enable the clock to register its time with extreme accuracy, such as can only be derived from the moving pendulum itself; secondly, to provide a chronograph capable of recording to the thousandth part of a second.

And now we are embarking upon the consideration of thousandths, let us understand the proper use of the third place of decimals in time-keeping, i.e. in the comparison of the clock with transit observations. Since the latter are ragged, a smooth line is drawn through them to represent the rate of the clock: any change in its direction would be conveniently and correctly expressed as a change of rate in thousandths of a second per day.

Where one of the two things to be compared is "woolly" you must resolve it into a firm line by a long average before attempting to use such a fine scale in measuring the distance between them. In this respect, the columns of figures published in astronomical journals purporting to show the errors of free pendulum clocks are delusive. The third decimal place should only be used for a comparison of smooth lines, stating their average rate in thousandths of a second per day.

The first of these two requirements is already satisfied by the remontoire on which the free pendulum clock is based.

Throughout the long reign of the Graham dead-beat escapement the only way in which the clock could record itself was by means of a contact applied to its 'scape wheel. That was vicious, not only nor mainly because the contact-making of its benighted age took all its energy by highway robbery from the clock, but because of its lack of precision, since it thought nothing of making any second long by 1/100th part and the next correspondingly short.

On the other hand, the free pendulum requires no applied contact to record its performance, since the Synchronome remontoire is a switching action available for all purposes and being taken direct off the pendulum itself is correct to 1/1000th of a second. This virtue was always suspected, but was not proved until the use of cinematography and the invention of the micro-chronograph.

That is the natural result of the Synchronome switch arm falling off the pendulum into contact, and until I drew attention to this feature of the Synchronome invention in the *British Horological Journal* of January 1906 the possibility of taking precise time mechanically from a pendulum without it being aware of it was not realized.

Prof. R. A. Sampson, the then Astronomer Royal for Scotland, devised a micro-chronograph in Edinburgh* in 1927 for a comparison between his free pendulum clock SH.No.0 and SH.No.4. By using cinematograph film, he measured in thousandths of a second the differences between them throughout the year. The zigzags debited to them by transit observations were self-condemned by their appearance in the records of both clocks.

Dr. Tomlinson of the National Physical Laboratory has produced also a remarkable micro-chronograph, which may

---

* Royal Society, Edinburgh, vol. xlviii, Part II, No. 13.

be popularly described as a gramophone disc of what looks like smoked glass, but will give a fine line under the point of a needle revealing, under a microscope, time-spacing of one-thousandth of a second, easily read by interpolation to 10-thousands. Mr. A. L. Loomis, of Tuxedo Park, N.Y., in 1927 invented a spark micro-chronograph of equivalent ability which will be described in the next chapter when we discuss the particular purpose for which it was invented.

It will be noted that this remarkable precision, both of time-measurement and time-recording, have been carried out by purely mechanical means. The frequency of the latter operation is, however, limted by the natural periodicity of the action of the Synchronome remontoire which is every half minute, and there may be occasions where that interval is too long for convenient subdivision. If impulses of great accuracy are required every second or every 2 sec., a photo-electric cell is a useful tool and may be applied to a free pendulum in the manner illustrated in fig. 99. The bottom of the cylindrical copper case is always sealed with a large disc of plate glass ¾ in. thick. The primary object of this is to enable the arc or swing of the pendulum to be measured by a microscope placed below it. The light from a lamp L is reflected by a parabolic mirror H in a vertical direction through a condenser E mounted at the lower end of a tube L^1, the upper end of which is in close association with the underside of the plate glass A.

The light beam, having passed through the plate, is deflected by a mirror M^1 at right angles to the axis of the case and to the plane of swing of the pendulum via a cylindrical lens F and light slot G on to a similar mirror M^2, which again deflects it in a vertical direction downwards through the plate glass A, a second tube L^2, and finally on to the active surface of a photo-electric cell Q. The effect of the cylindrical lens is to project a line image of the lamp filament into space just beyond the opening of the light slot and in line with the plane of swing of the pendulum. The light slot acts merely as a filter to intercept extraneous light, so leaving the line image well defined and clear cut. A shutter S fixed to the pendulum in line with the plane of its swing intercepts the beam of light at the focal point every time the pendulum passes through its zero position on its excursion from right to left: it keeps it obscured until the pendulum reaches the same point when travelling in the opposite direction 1 sec. later.

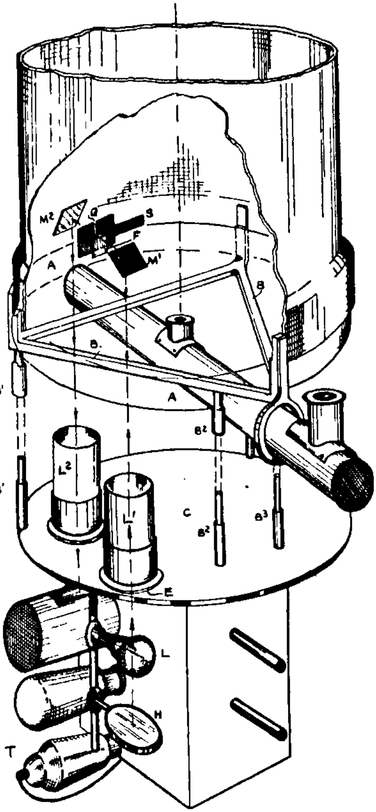

Fig. 99.—Photo-electric cell applied to free pendulum

Of course an ordinary photo-electric cell is capable of producing only very feeble electrical impulses; hence some form of "relaying" is essential. Now the primary object of this device is to "take time" off the free pendulum with the greatest accuracy, so the relay must be not only very sensitive, but it must have no time-lag. The use of any form of mechanical relay is therefore ruled out.

The development of wireless and television has recently produced a type of gas discharge tube, in which the flow of current from anode to cathode can be "held back" by the grid and only "released" when the grid potential is lowered with respect to the anode potential, and that is what the pendulum's light signal does. By enclosing the electrodes in inert gases such as neon, argon and helium, comparatively large currents can be handled. The action of the grid being purely thermionic, practically no energy is required to perform the release, and it is of course almost instantaneous.

The electrical and optical components are built in the form of a compact unit attached to the outside of the lower end of the free pendulum case, since if the photo-electric cell and source of light were put inside the case, they would be inaccessible for adjustment and replacement of elements, as the free pendulum is always run in a vacuum.

Thus the clock has now achieved a steadiness of rate that it is beyond the power of transit observations to check over short periods, though of course the speed of the earth's rotation is its ultimate standard; whilst the new microchronographs we have described, the means of recording the clock thereon, and the means of comparison by wireless telegraphy are competent to do all that is required of them.

Thanks to this tuning up of the adjuncts to time measurement—these improvements in our tools—it has been possible to investigate and diagnose with wonderful accuracy the causes of such errors as remain. The effects of secular growth of the Invar rod, the small residual temperature coefficient, and microscopical variations in the arc of the pendulum have been segregated and evaluated as we have seen in the previous chapter.

CHAPTER XXI

THE PERFORMANCE OF THE FREE PENDULUM

SINCE its introduction in 1925, the free pendulum has been engaged in beating its own records in observatories all over the world.

Instead of selecting for reproduction outstanding examples from my collection of rate charts, which would be rather dull reading, I propose to describe its achievements as a watch-dog over the members of our family in the solar system. We shall hear it *baying the moon*, protesting against its irregularities, which upset the dignity of its parent, the earth, by imparting to it a wobble which we call *Nutation*.

And we shall hear it bark every night in protest against the influence which this bad boy of the family exercises upon its parent's *Gravity*.

It would appear that there is little which this clock does not know about our solar system, since it is sensitive enough to note every irregularity in the motion of its units, and we should express no surprise if we see it attempt to check the speed of rotation of the earth itself, although, since that is our standard and fundamental time-keeper, such an ambition seems at first sight to be the height of impertinence.

Such achievements will do more to convince the sceptical than rate charts and rows of figures. The astronomers have acquired a new tool: the status of the clock has been raised to that of an astronomical instrument and it now keeps company with the telescopes.

Greenwich was the first observatory to benefit from free pendulums, so it is fitting that their performances should be the first recounted. And there is another reason. After Professor R. A. Sampson, then Astronomer Royal for Scotland, had tried out the first model in Edinburgh Observatory in 1922, the late Sir Frank Dyson was the first astronomer to order one, and his assistants, Dr. J. Jackson* and Mr. Bowyer, "set the pace" in the systematic recording and analysis of its rate. Those who have experienced the heartbreaking task of a pioneer in securing the adoption of an invention will understand the author's gratitude to the then Astronomer Royal for his enterprise in installing the first, and to his staff for their devoted study of its performance.

Greenwich Observatory is built on the site of the thirteenth-century castle of Duke Humphrey of Gloucester, and the cellar selected for the *sidereal* clock chamber may well have been the deepest of its dungeons. It contains three free pendulums bolted rigidly to walls 4 ft. thick. The first (No. 3) was installed in November 1924, and was adopted as the standard sidereal on January 1, 1925. This foretaste of its mettle was such that it received at once the signal honour of reversing the normal method of charting. Its rate having been determined during the first six weeks' run, it was forecasted and represented by a smooth line carried forward for some months and the transit observations were plotted as a zigzag on each side of it. That method has been adopted ever since, it being realized that no single transit observation, nor even a group of transits averaged, can say at any moment that the clock is wrong; they can only indicate a slight deviation from the forecast as a result of months of observation. An example of such a chart is given in fig. 100, one of the monthly series produced at Greenwich in 1926. The days of the month are given horizontally, and the vertical spaces represent hundredth parts of a second. The clock (SH.3) was judged to have a slowing rate of 0·038 sec. per day during March, and on the assumption that it would hold that rate it was represented provisionally by a straight line for April. A number of transits were taken every night and each set was averaged in order to determine the apparent error of the clock, the number of transits in each group being

---

* Resigned from Greenwich March 1933 to become Director of Cape Observatory.

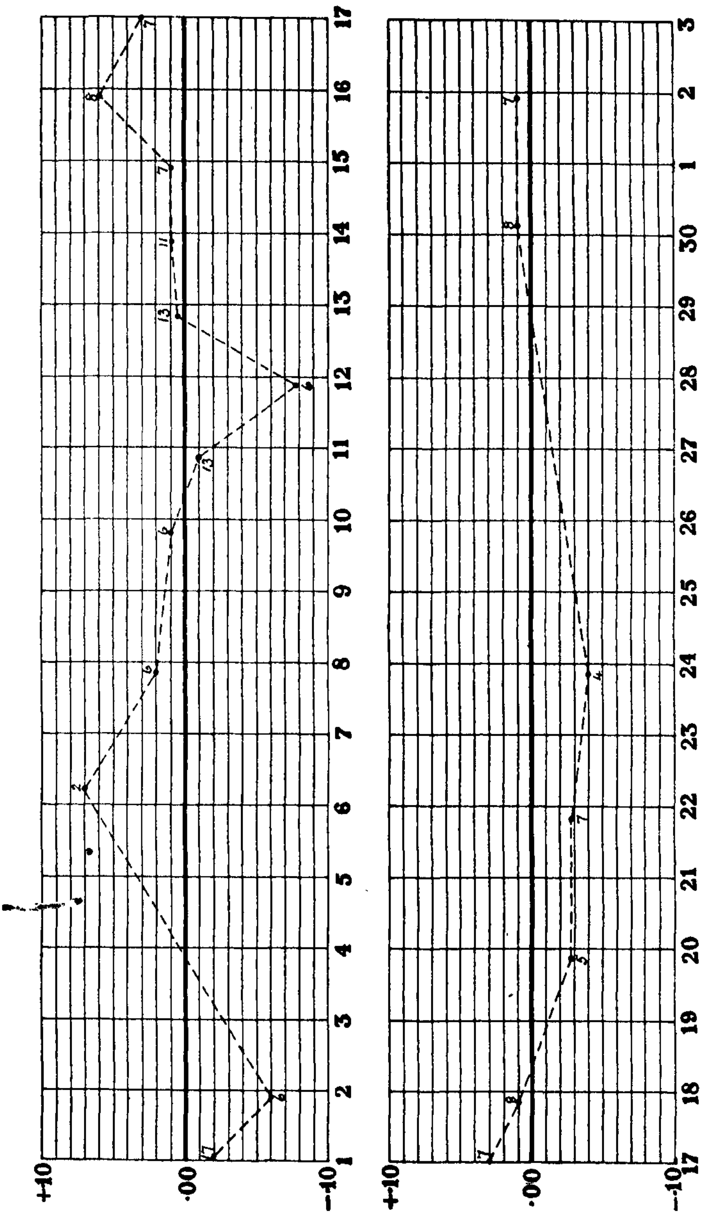

FIG. 100.—Checking a free pendulum clock by transit observations

indicated by a figure at the determined spot. It will be observed that they all fall within a band of ± 1/10th sec.

At that date the old transit circle telescope was the only one used for time determination. A smaller and more accurate reversible instrument was then brought into use and transit observations may now be relied upon to lie within ± 1/20th sec. In fig. 100 it will be seen that the forecasted clock-rate line bisects the transit observations, thereby proving the accuracy of its forecasted rate and its steadiness throughout the month.

Dr. Jackson also adopted the thousandth of a second as his unit in his analysis of the performance of the Greenwich clocks in the Monthly Notices of the R.A.S. in 1927–30.

In May 1927 it was reported to me that SH.3 was changing its rate. Insufficient temperature compensation was suspected, and I was asked to explain it. However, Dr. Jackson soon discovered that the earth and not the clock was to blame.

For the first time in history, a clock had run with such accuracy that it revealed nutation.

Nutation is a variable and composite quantity made up of a variety of periodic perturbations which, in effect, cause our polar axis to describe a cone as the earth rotates, analogous to the wobble of a dying top. It is mainly due to lack of uniformity in the pre-cession of the Equinox. It comprises terms of long period depending upon the longitude of the moon's node, the longitude of the sun, and the longitude of the sun's perigee. This is called Nutation in Right Ascension with a principal period of 18⅔ years and a range of ± 1·2 s. This varies so slowly that it causes little trouble but the terms of short period involving functions of the moon's longitude have to be considered. The principal period is half a lunar month and its range is ± 0·02 sec.

We can realize this kind of irregularity if we think of it as due to the action of the moon on the earth's equatorial swelling which will obviously vary with the inclination of the lunar orbit.

Shakespeare called it "the inconstant moon" and Sir John Herschel in his *Outlines of Astronomy* said a hundred years ago "we ought therefore as carefully to distinguish between mean and apparent sidereal time as between mean and apparent solar time."

A typical nutation curve is shown in fig. 101, in which it will be observed that the maximum change of rate is 0·003 sec. per day, an amount which it was rightly assumed would be entirely submerged by the escapement errors of the best clocks known.

The transit observations departed from the forecasted clock-rate line much as appears in fig. 101, and the clock might have been blamed or held to have wandered to that extent. Instead of which the definition of time itself was altered by Dr. Comrie in the *Nautical Almanac* so as to include nutation in the volume for 1931, since when the necessary correction has always been made at Greenwich.

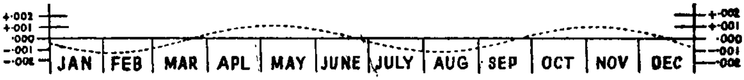

FIG. 101—Nutation

But it was not until 1936 that Paris made the change. In February of that year the *Bulletin Horaire* published the performance of the Free Pendulum clock SH.44, which I had taken over in the air liner "Heracles" and erected in the catacombs 100 ft. below the observatory in 1931. They gave its chart for the year 1935 as reproduced in fig. 102, based upon its daily rates, the average for each month being indicated by a black dot. Observe that they all fall within a space representing 1/100th of a second; even the cumulative effect of the rates, as indicated error, never amounts to 1/10th of a second.

The dotted line below represents the average at each month at which the correction for nutation was changing its rate; it is an uncorrected residual and when applied it shows that the performance of the clock very closely approaches the straight-line ideal.

This remarkable chart is as valuable a testimonial to the astronomers as it is to the clockmaker. No finer testimony to the precision of their time determination could be adduced. They are mutually confirmatory; the astronomer and the clockmaker may shake hands!

The next issue of the *Bulletin Horaire* included the following announcement:

> Le Bureau de l'Heure et les Observatoires lui faisant connaître ou poubliant eux-mêmes les heures d'émission ou de réception des signaux horaires en temps sidéral, sont invités à ne prendre en consideration que le temps sideral vrai, diminue des termes périodiques de la nutation (à longue et courte période).
>
> On trouvera dans le Bulletin Horaire les données rélatives à l'application de cette mésure. Le temps sidéral vrai, débarrassé des termes de la nutation totale en longitude et de l'obliquité de l'écliptique, portera le nom de temps sidéral moyen de Greenwich.

But in these days of radio transmission, when time-determining observatories transmit rhythmic signals and subsequently circulate corrections in thousandths ~~of a~~ second, transit observations may be dispensed with as a means of checking the performance of a clock. Take for instance the National Physical Laboratory, who are accustomed to apply a microscope to everything in the scientific world that is capable of measurement. They produced a record of free pendulum clock SH.13 in 1935, using collated wireless transits as their standard without transit observations of their own, giving monthly mean of its daily rates as follows:—

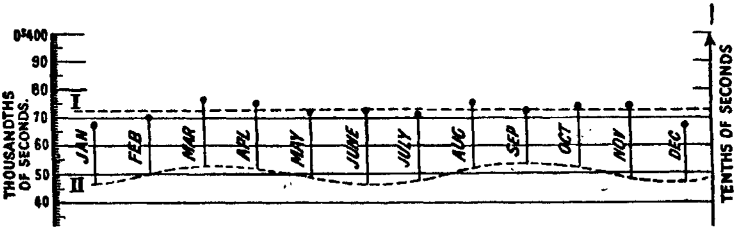

FIG. 102.—No. 44 at Paris, 1935

	Seconds
October 1934	0·052
November	0·051
December	0·053
January 1935	0·051
February	0·053
March	0·053
April	0·049
May	0·050

In this they quickly capped Paris and improved upon the above list of figures by publishing a graph of a record of its performance for the next three years, which we reproduce in fig. 103. But this elevating pastime of breaking each other's records has become quite serious. In the meantime Monsieur N. Stoyko of the Paris Observatory compared No. 44 assiduously with the average of nine transmitting observatories, and reported that its mean monthly rates were practically perfect.

Just as it had always been assumed that no clock could be sufficiently accurate to reveal nutation, so astronomers and geodetists were still more definite that the variation in gravity due to the moon could not be shown by a clock, if only for the reason that all precision clocks had a pendulum whose timekeeping was itself based upon gravity. Whilst nutation demanded accuracy to the order of a few thousandths part of a second to reveal it, a lunar period would require ten thousandths. Nevertheless, this marvellous feat was accomplished by Mr. A. L. Loomis of Tuxedo Park, New York, in 1931 by comparison of his three free pendulum clocks with the quartz crystal clock of Mr. W. A. Marrison of the Bell Telephone Laboratories, which is of course independent of gravity. The spark chronograph invented by Mr. Loomis made this comparison possible.

His paper chart is unusually wide, about 10 in., and is moved forward in half-minute steps by the slave clock over a metal comb with one hundred upstanding insulated teeth. Above the paper and the comb a contact arm rotates at a uniform speed under the control of a quartz crystal, whose

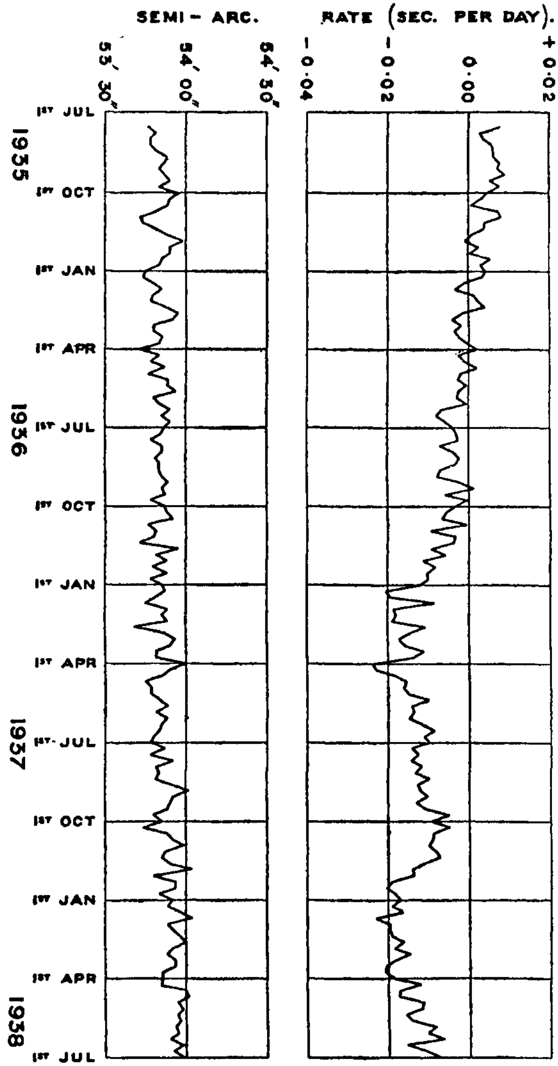

FIG. 103.—N.P.L. chart. Weekly mean values of semi-arc and rate of free pendulum No. 13 for 3 years from 1935, July 1, to 1938, July 1.

vibrations are maintained at radio frequency. A sub-multiple of one thousand vibrations per second was produced at the Bell Telephone Laboratories in New York and transmitted by landline to the pendulums in his house at Tuxedo Park, forty miles away. This is applied to the chronograph by means of a phonic motor, which rotates the contact arm over these wires as shown in fig. 104 scanning them without actual metallic contact at a speed of ten revolutions per second, with the result that every tooth in turn along the length of the comb provides a path for an electric current. When the Synchronome remontoire of each free pendulum operates it makes use of whichever of these paths is open at the moment and discharges a spark through the tooth of the comb that represents the particular 1/1000th part of the second at which the clock has arrived. The spark pierces the paper on its way to a horizontal bus-bar adjacent to it, every 1/10th of an inch representing the 1/1000th part of a second, and the tilt of a line of sparks against the edge of the paper enables comparison with the crystal clock to 1/10,000th part of a second. He let these records accumulate automatically for three months and set to work with the late Professor E. W. Brown and Dr. Brouwer of Yale to analyse the result. After disentangling other fluctuations of rate of definite periods due, for instance, to modulation between the pendulums communicated through solid rock, a clear

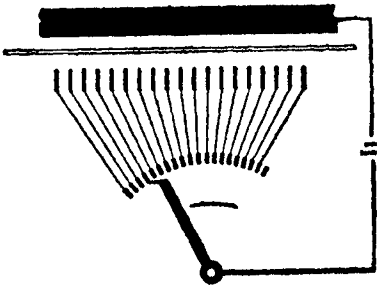

FIG. 104.—Spark micro-chronograph. Loomis

residual was left showing the lunar period with a maximum and minimum of 2/10,000ths of a second.

Mr. Loomis stated that a single impulse from any one of his free pendulums (SH.20, 21 and 22) has an uncertainty of one or two milli-seconds. This, he said, was due to the eccentricity of the impulse wheel (see fig. 94) permitting the gravity arm to fall at slightly different times, since the wheel is given a small turn with each fall. These variations are entirely smoothed out when a series of sparks are averaged.

He states that in his three clocks, these small wheels, which actually consist of watch 'scape wheels with their teeth removed, have slightly different irregularities "which persisted over the entire two years of investigation, and were of the greatest assistance in the identification of the different lines of sparks."

The National Physical Laboratory at Teddington has experienced a similar degree of accuracy. It appears, therefore, that there is not much call for photo-electric cells as a means of taking time with precision from a moving pendulum, and there is much to be said in favour of the direct use of a robust mechanical switch, which will be operated by the free pendulum itself with that degree of accuracy or inaccuracy, without being conscious that it has performed any such duty. In our estimate of character, how keenly do we look for "unintentional self-revelation." We have it here *in excelsis*, hence I am in no hurry to seek the aid of photo-electric cells.

To continue the story of the Greenwich clocks, the second sidereal free pendulum SH.11 was installed in February 1927, and was untouched until forcibly stopped in March 1936, after a continuous run of nearly nine years.

The third, no. 40, the gift of Mr. H. R. Fry, F.R.A.S., was installed in 1936. These three clocks are all in the sidereal clock chamber.

In observatories a position in the basement is always selected for the sidereal clocks, and the chamber is kept at a constant temperature by a thermostat, although the pendulums are compensated for variations of temperature as closely as possible following upon special determination of coefficients of expansion at the National Physical Laboratory. The function of the sidereal clock is to assist the astronomer to determine true time by direct readings against his star transit observations. Their rate is ascertained with the greatest care, but is not corrected as it is its uniformity that matters. The sidereal clock chamber is rarely visited: in fact, at Greenwich it can now be entered only by passing through another chamber devoted to the mean-time free pendulums SH.16 and SH.49. The slave clocks, on the other hand, are placed in a more accessible position on the ground floor. When the indicated time of a free pendulum has accumulated to 2 sec., plus or minus, its slave may be corrected by moving its 15T wheel one tooth forwards or backwards, but a free pendulum itself may and should be left untouched. It is only by leaving it alone that justice can be done to its remarkable uniformity of rate, since the closest observation of several weeks or months is required to determine what deviation from uniformity has occurred.

When a free pendulum is used to measure *mean solar* time, however, it is necessary to regulate it as closely as possible, particularly if the clock is used to transmit wireless time signals. To achieve an absolute zero rate would be as difficult as balancing a billiard ball on the edge of a razor, and since that cannot be done it is necessary to provide means for correction. For this purpose the method of magnetic correction associated with the name of Sir George Airy is used, a permanent magnet being attached to the bottom of the pendulum with a coil of wire fixed outside the floor of the case immediately underneath it, so that the force of gravity may be diminished or increased by the application of a small current in either direction, as illustrated in fig. 105, in which (1) is the magnet, (2) the coil, (3) an ammeter calibrated for gain or loss, (4) a battery, (5) a change-over switch, and (6) an adjustable resistance. Magnetic correction of the same value is used on various old escapement clocks in Greenwich Observatory to which hit-and-miss synchronizers are applied.

There is something anomalous in correcting a clock of such precision. One has to consider carefully the reliability of the standard to which you are setting it, since it is quite likely that the free pendulum itself is actually the better timekeeper of the two. Its rate line on the time chart may not be horizontal, but it is probably straight. Frequent and slavish correction merely prostitutes the clock to the level of the standard, whatever it may be. The only safe rule is to apply the correction in uniform homoeopathic doses at infrequent and regular intervals. Any irregularity in the uniformity of the doses or the times at which they have to be administered will be the measure of the clock's departure from its normal rate.

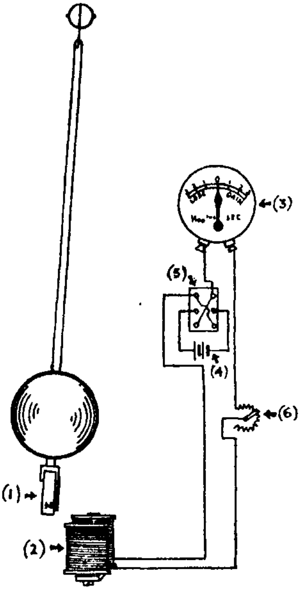

FIG. 105.—Magnetic corrector

There are two *mean-time* free pendulums at Greenwich, SH.16 and SH.49. They also are in the basement but in a "guard room" to the sidereal clock chamber within. The slave clocks of all these five free pendulums are on the ground floor.

On pages 175 and 176 (chapter XVIII) a remark of the late Willem de Sitter, the astronomer of Leyden University, regarding the Greenwich clock was quoted. He said (in *Nature* of January 21, 1928): "One of these clocks has been left entirely to itself, being, however, kept under rigorous observation at Greenwich, during the greater part of a year, *and its rate has been absolutely invariable*. . . . It looks as if this clock could be depended upon to keep time within a few hundredths of a second for a period measured in years instead of weeks." Men of science recoil instinctively from overstatement which so often accompanies enthusiasm, and he was taken severely to task by the then Astronomer Royal of Scotland at the Royal

Society of Edinburgh and at the British Horological Institute, who deplored "exaggerated expectations with respect to its performance, even in well-informed quarters." But in the same papers he (Professor Sampson) reported that one of his own clocks (SH.4) ran for the whole year 1927 so close to the mean rate of 0·0019 sec. per day, that its accumulated error was only 0·7 sec. at December 31st. This is equivalent to saying to a King's Prize man at Bisley: "No, you can't shoot straight: you missed the bull *on the hundred-mile range* and scored only an inner!" or that, firing from London, he missed a saucer on the end of Brighton pier, but hit a plate.

In none other of the physical sciences has this degree of accuracy of measurement been achieved. To be able to say that we can measure a mile with an accuracy of one part in a million, our error must not exceed 0·06 in. In a clock it may be expressed in this way: there are 31,536,000 seconds in a year; a free pendulum which requires a year to get a second out—and many have accomplished this in the world's observatories—measures time to within one part in 30 million. The Paris clock, as we have seen, ran to within 1/10th of a second, even when erroneously debited with nutation; and, if we refrain from suggesting that its accuracy is of the order of one part in 300 million of the time measured, it is because the figure is fantastic.

In January 1929, on the third occasion when Dr. Jackson presented the Royal Astronomical Society with a report upon the performance of the Greenwich free pendulum, he said: "It seems that we are getting to the stage in which we can compare the lengths of two successive years to 1 sec. of time."

We have the authority of the Astronomer Royal for saying that the changes in the daily rate of the earth's rotation from the average value which occurred in or near 1897 and 1918 amounted to 0·0034 sec., the accumulated amount in the course of the year being 1·24 sec., but he considers it just beyond the ability of the free pendulum to reveal this and he favours the quartz crystal clock. Admitting the latter's equality, or even superiority, in the measurement of short periods of time, I see no prospect of maintaining a sufficiently constant temperature with immunity from involuntary stoppages necessary for such a comparison, though it may be of the greatest value in determining whether or not a particular free pendulum has changed its rate. Nevertheless, the comparison of the earth's rotation with the free pendulum does seem to be within our grasp, for one has only to envisage the Paris clock SH.44 running continuously for nine years (as did SH.11 at Greenwich and SH.14 at Warsaw), and two or three more of them doing the same in other observatories, to realize the possibility—always assuming that their records are co-ordinated and allowances made for such known causes of variations as can be evaluated.

The present practice in time determination at Greenwich Observatory was described by the Astronomer Royal at a meeting of the Royal Astronomical Society in February 1939, and I close this chapter with an extract from the *Monthly Notices* of that Society:—

> Transit observations and wireless time-signals have all been recorded on the chronograph against free pendulum clock No. 3, but for the purpose of plotting a smooth curve through the points so as to determine the provisional and final clock errors the time determinations have been referred to the mean of as many clocks as possible. From January 1st to September 30th the mean clock consisted of the five free pendulums at Greenwich together with no. 13 at the National Physical Laboratory. Two of the Greenwich clocks, nos. 16 and 49, record mean solar time instead of sidereal time. With no. 49, which runs undisturbed, this involves no difference in principle; but no. 16, which controls all the time-signal transmissions, is magnetically corrected several times a day. Before it can be used in the mean clock, these corrections have to be subtracted again, and comparison with the other clocks shows that when this has been done no. 16 is as good as any of its fellows. The daily comparison of no. 13 with the Greenwich clocks has been effected by means of the 10-hr. Rugby rhythmic signal, which is regularly received at Teddington and Greenwich. From May 17th onwards, similar comparisons of no. 4, at Edinburgh, have been received daily, and from October 1st this clock has been incorporated in the mean.

CHAPTER XXII

POPULARIZING THE FREE PENDULUM

Having shown how time can be measured with an accuracy of 1 sec. in a year, the layman asks: "What is the use of it? Are we any the better off?" No question can be better calculated to rouse the wrath of the physicists, those seekers after truth who are always exploring the hidden mysteries of nature and science, and for whom accurate measurement is the first article of their creed. They acclaim an achieved precision of one part in 30 millions—less than 1 sec. of time in a year—with a respect that amounts almost to reverence.

Achievements in pure science frequently lie unused for years, merely adding to the general store of knowledge until some further detail is evolved which galvanizes the whole into a great and beneficent invention. This achievement is more fortunate, since it has an immediate if limited application. I refer, of course, to astronomy. Time determination is the first duty of an observatory; it may be said that Greenwich was established for that purpose.

But the practical man's question is still insistent. Is not a wider use of the invention possible? Are the scientists and astronomers alone to reap the benefit?

The root idea of a free pendulum is the employment of a slave clock running in harness with it to perform its escapement function for it. Up to the present that has involved a construction and a cost prohibitive in a commercial article; from its very nature and the nature of its job its use is limited to observatories.

Can it not be produced in some simpler form?

The only way to dispense with a slave clock is to apply a contact to the master pendulum itself, *which then ceases to be* *free*, and as a warning to others I will recount the failure of an attempt to do this.

A few years ago, seeing no way out of this impasse except by very slightly lowering the high standard we had set ourselves, I was prepared for a commercial clock to take a little energy out of an otherwise free pendulum, provided the following conditions were rigorously observed.

The disturbing force must begin with extreme gentleness, increasing to its maximum when the pendulum is in the middle of its swing and ending with equal gentleness, the increase and diminution being equally disposed on each side of zero. The suggestion I offered is a magnetically operated contact as illustrated in fig. 106. It provides a simple means of performing the time-counting and releasing formerly done by the wheel of fifteen teeth illustrated in figs. 50 and 78. This is the only construction I could then conceive of that would meet these conditions. Anything in the nature of a mechanical contact is ruled out as incompetent to fulfil them. A point of a wire passing through a globule of mercury is ruled out on the grounds of unreliability, and photo-electric cells and thermionic valves are ruled out on the ground of complexity (see chapter XX), lack of uniformity of impulse, and lack of the robust action of a mechanical switch.

But in the suggested arrangement one of the contact springs is provided with a little armature of soft iron and is drawn down into contact when the permanent magnet passes underneath it. The seconds impulses so originated operate a dial movement of the type described in fig. 60, chapter XI, and the thirtieth impulse is shunted through the magnet to withdraw the catch supporting the gravity lever of the Synchronome remontoire.

This was given a good try out, and though found useful for many purposes was not an unqualified success, and did not deserve to be since I had lowered my standard by transgressing the principles I have enunciated—the freedom of the pendulum, the transmission of energy, and the other virtues of the remontoire. It was a throw-back.

So we must renounce the temptation to employ the pen-

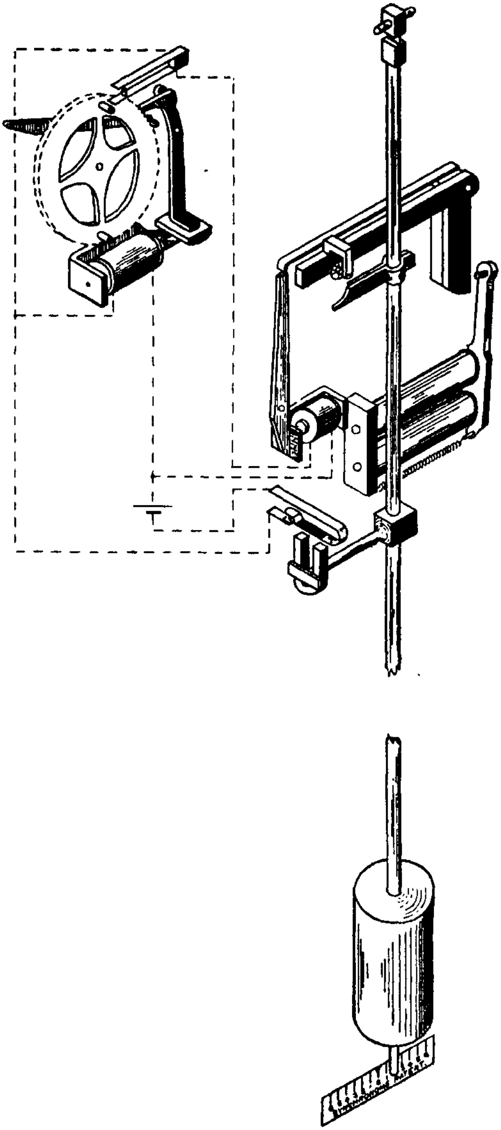

Fig. 106.—Magnetically operated contact

dulum to do anything at all, even to induce a current in a magnetic field. We must maintain the standard of perfect freedom, and not lower our flag at the dictates of convenience. We are therefore thrown back upon the slave clock, but we may widen our view and remember that we are free to adopt any device which will measure the time between one impulse and the next.

But unless we permit ourselves to use a photo-electric cell to drive the free pendulum, to count out the half minutes and to synchronize, we are limited to mechanical methods; and we have seen that the latter involves the use of the propelling force to give the synchronizing signal after it has fallen off the pendulum. The instant at which the propelling member parts company with the free pendulum is the commencement of the period to be measured. It may start a time-measurer from a position of rest as in O'Leary (chapter XVI, fig. 88), or it may regulate one that is in constant motion.

And we need not restrict ourselves to balance wheels or pendulums. Why not use a lagged relay, the charging of a condenser, an air fan, a dash-pot or a rolling ball? Most of my readers will be acquainted with the rolling-ball clock of Sir William Congreve, which he made in 1808 for the then Prince of Wales. It was invented by Nicolas Grollier (1593–1686). It has served as a window attraction in jewellers' shops. A table-top is pivoted at its centre and has a shallow groove cut in its surface, zigzagging from side to side from one end to the other. Tilt it on its hinge and start the steel ball at the top of the incline. It will then have a long run, perhaps for half a minute; when it reaches the bottom it will strike a catch releasing a power train which will reverse the tilt, and the ball will return again along the same path.

Why not use this ball as a slave clock? Let the ball itself provide the impulse by striking the pendulum as it passes through zero or by sitting in a little arm or bracket on the pendulum during a part of its travel in one direction. The free pendulum itself dictates (without being conscious that it is doing anything at all) the precise instant at which each excursion is begun; so the ball has only to measure the time of a short interval such as 30 sec., and if it cannot do that with sufficient accuracy, you must be content to give the free pendulum an impulse once every 2 sec., a period that a ball is quite competent to measure.

A beautiful free pendulum clock has been made on these lines by Captain Edwin E. Craig of Hindhead. Two little steel balls roll over impulse brackets, one at each side of the pendulum. They are released by triggers, and are lifted up after their fall by a simple mechanism operated by a weight on a Huyghens endless chain. This weight is rewound automatically by a synchronous motor connected to the electric light supply.

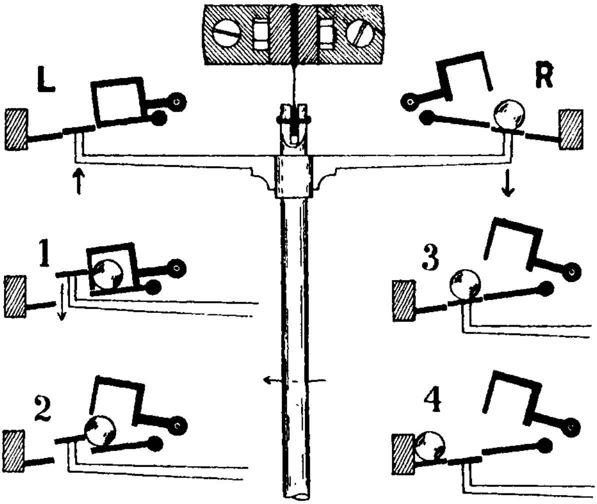

FIG. 107.—A free pendulum propelled by rolling balls

The steel balls are 3/16 in. diameter, and each in turn runs towards you from the back and waits in a gate until the little platform carried by the pendulum has fallen and is ready to receive the impulse.

The sequence is clearly shown in fig. 107. Let us begin with the ball on the platform on the right which is engaged in giving impulse to the pendulum at zero as the pendulum bracket descends, its table top almost completing an inclined plane down which the ball naturally runs.

We will now look at the left-hand bracket, which is also at zero, but is rising. The pendulum completes its excursion to the left and is perfectly free on its return, and shortly before the impulse table descends to zero the left-hand ball has appeared in the gate and remains there awaiting orders, as shown at 1. In the meantime the right-hand ball, having rolled off on to the fixed platform, at once changed its direction and ran away from you out of sight and fell into a pit, where it tripped a catch, unlocking the slave train, which immediately lifted the left-hand gate as shown at 2.

Observe that the ball's equatorial belt is resting against an edge of the impulse table and that the pendulum on its descent will help itself to the services of the ball whenever it likes; in other words, it will feel the increasing downwards pressure grow and grow until ultimately it will carry its full weight, as shown at 3.

You catch a glimpse of the ball in 4, when having done its job it changes its direction, making a turn at right angles and runs away from you out of sight towards the back of the movement, where it falls into its pit and raises the right-hand gate, each ball in turn being lifted to the top of its Cresta Run again.

The whole thing is mounted in an air-tight case and is kept at constant barometric pressure or *in vacuo*. At the time of writing this clock has not had the honour of an observatory test, but I see no reason why it should not be worthy of use for time determination. I have mentioned it merely as an example of an entirely different and unexpected kind of slave clock in the hope that it will inspire my readers to devise others of their own. Here is a profitable pastime for the amateur mechanic, a subject for debate at horological institutes, and an object lesson for instructions in first principles in technical and horological schools.

It will be recalled that in chapter XIV, I spoke of my attempt in the year 1912 to use a half-seconds pendulum as

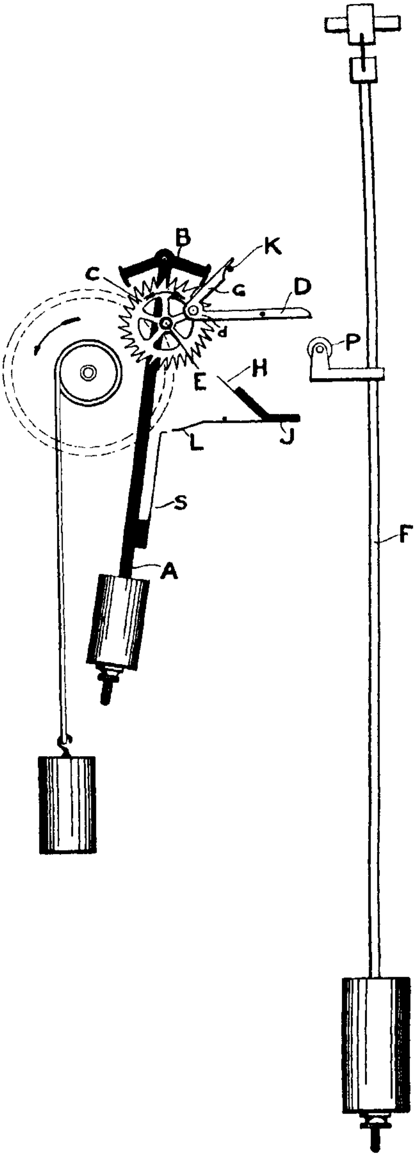

FIG. 108.—Mechanical free pendulum. Hope-Jones

a slave clock. Not until 1935 did I discover that it was not only possible, but that it was the right tool to use, and that it provided the rational method of measuring the interval of time between the delivery of two successive impulses to a free pendulum spaced fairly widely. The ratio of length 4 : 1 and of time 2 : 1 fits precisely, since one semi-vibration provides a convenient duration for the impulse and the resetting.

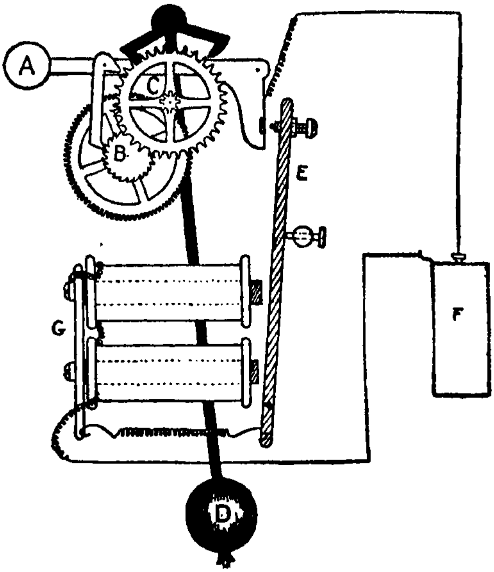

FIG. 109.—The Synchronome remontoire in its earliest form

A simple mechanical form of this is shown in fig. 108, in which an ordinary eight-day mechanical clock is seen on the left performing the function of a slave. It has a Graham dead-beat escapement B C with a pendulum A beating half seconds and provided with a hit-and-miss synchronizer S L. The gravity lever D is pivoted eccentrically on the 'scape wheel at *d* and is raised with it, being turned over by a forward extension of the arbor E, until it falls over the top when its rear arm G falls on stop K. The advance of the next tooth of the 'scape wheel will release it, and it will drop on to the impulse wheel P of the free pendulum F. Having delivered the impulse, it operates the synchronizer, performing the act of comparison by touching H immediately it has passed zero, and leaves it to make the correction if required.

The slave clock may be electrically maintained or self-wound by any of the methods described in chapters VII or VIII, such as the remontoire invented in 1895, fig. 35, and repeated here as fig. 109.

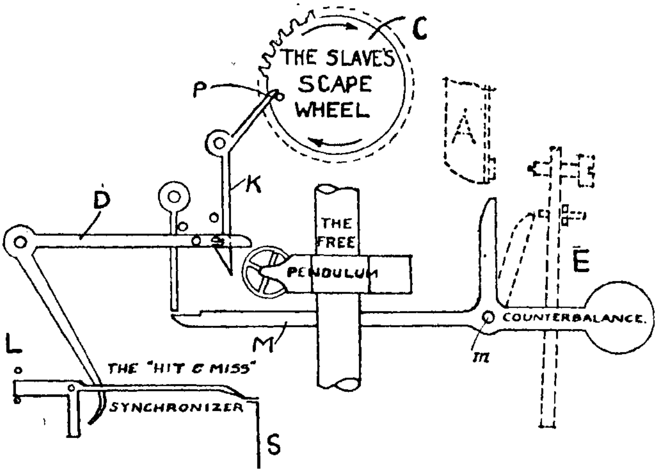

FIG. 110.—Free pendulum and slave combined

If the free pendulum lever-work illustrated in fig. 110 is superimposed upon this, it will be easily understood how the impulse lever D is released by the pin P on the 'scape wheel through the medium of catch K and having synchronized at L.S., it pushes aside a catch and allows the counter-balanced lever M to reset it. The latter is restored to its normal position when next the half-minute remontoire E.A. operates. It is also shown with a motor drive in fig. 115, chapter XXIV.

This type of free pendulum with slave clock beating half seconds is distinguished by the fact that the slave provides a gravity lever, releasing and resetting it, thereby leaving the free pendulum to swing alone relieved of its Synchronome remontoire. It thus does more than perform the escapement duty for the free pendulum; it provides the escapement itself. But the basic idea of using a half-seconds pendulum as a slave to perform such duties for a free pendulum opens the door to a radically different method of control or synchronization.

CHAPTER XXIII

SYNCHRONIZATION BY CIRCULAR ERROR

In bringing this edition to a close I am able to announce a solution that concedes nothing to opportunism and retains the principles of a free pendulum in their integrity. The constant urge to reduce, to eliminate and to simplify what is left led me to revive a method of synchronous propulsion that I evolved in 1929 when studying the sympathetic pendulums described in chapter IV and the root cause of their futility. I then demonstrated that synchronization by the direct application of electro-magnetic forces to a swinging pendulum, which was a failure when the signals were transmitted every second to a long pendulum beating seconds, was quite satisfactory when applied at widely spaced intervals to a short pendulum beating half seconds.

Let us first remind ourselves of how electro-magnetism is applied to the lower end of a seconds pendulum for a different purpose altogether, viz. the correction of the indicated error of a clock by very small amounts.

We are now referring to the best standard observatory clocks, whose pendulums are never less than a metre in length, beating seconds.

You cannot set the hands of a clock, manually, closer than the nearest second. In observatory practice, particularly when the transmission of time signals is undertaken, it is necessary to set a mean time regulator clock much closer, and this is commonly effected by what is known as the Sir George Airy magnetic corrector—actually due to Mr. Ellis, the chief time assistant then at Greenwich. It is illustrated in fig. 105, chapter XXI.

It consists of an armature on the bottom of the pendulum and a fixed coil below it; send a small current through this in one direction, and the armature will be attracted; reverse the direction, and it will be repelled. In the one case you will add to the force of gravity and accelerate the clock, and in the other case the repulsion will detract from, diminish the force of gravity and will slow it. You will calibrate it on a control dial which can be read in 1/100ths of a second fast or slow as a result of a definite current flowing for a definite time in either direction.

Thus the correction of a small error is achieved by a temporary alteration of the rate of the pendulum. It has nothing to do with, and must never be confused with, synchronization.

But in studying synchronization let us begin by using the same tools.

Assume that from some external source you receive in your electro-magnet a short duration impulse every second. Should the electro-magnet be fixed precisely below the pendulum, at the spot opposite the centre of its swing or in a word at *zero* then, if the pendulum is there at the moment the signal arrives, its effect will be negligible. But if the pendulum is slow, it will be approaching zero when this signal comes through. It is in process of being pulled down hill by gravity, and the signal will assist it and will accelerate the pendulum, not only by adding itself to the force of gravity, but by bringing into use its horizontal component and pulling it towards zero. Therein lies the germ of synchronization.

But if the pendulum is fast, it will be beyond zero when this signal comes through; its momentum is driving it uphill against the force of gravity. Again the signal will assist gravity, in this case in the effort to shorten its excursion uphill, and will accelerate the clock, already too fast; therefore it is clear that the electro-magnet is useless for the purpose of synchronization if placed underneath the pendulum at zero.

Suppose now we place the electro-magnet out of the centre, say, well to the left. Then if the pendulum is slow the signal when it comes through will find it approaching zero from the right, will add its force to that of G, and will accelerate it. And if it is fast, it will be hill-climbing on the left and the signal will assist it, pull it against the force of gravity, diminish gravity and slow it.

Thus was attempted the synchronization of seconds pendulums from incoming seconds impulses, but it was never very successful. The extent of the error that can be handled by this means is quite small; if the pendulum were out of regulation more than a few seconds in twenty-four hours, it would be beyond the range of control.

It will be observed that our approach to this matter has been from the point of view of varying the force of gravity, and by placing the electro-magnet in such a position that its attractive force is mainly in the vertical direction.

A much more forceful application of the synchronizing signals, capable of combating a much larger error, will be achieved if we let the pendulum carry an armature in the form of a curved rod embraced by a solenoid designed to give a horizontal attractive force. The delicate approach through variation of gravity goes by the board, and brute force is applied to pull the pendulum and alter its phase.

Now this is a very unsatisfactory thing to attempt in the case of a pendulum beating seconds with small arc and a heavy bob, as has been proved by the futility of all the work begun one hundred years ago by Alexander Bain, and continued by R. L. Jones, the stationmaster of Chester, James Ritchie and Sons, Bentley and others.

On the other hand, a half-seconds pendulum is ideal for such a purpose, and the standard practice for commercial electric clocks in France is based upon it, as illustrated in figs. 12 and 111. The late Professor Charles Féry of Paris was the first to point this out. Doubtless he benefited from the mathematical analysis of Cornu. Monsieur Marius Lavet is its best student to-day, and the commercial exponents are Brillié Frères, Le Roy, Hatôt, and Bulle.

The above is synchronization by forcible correction of the phase of the pendulum. It demands impulses every second, and will, of course, maintain the vibrations of the pendulum as well as synchronize them, as described on page 23.

Now I wish to submit to you a method that does not normally operate by forcible alteration of the phase of the pendulum and that does not demand impulses every second, yet provides both maintenance and synchronization. I believe this to be original and capable of useful service when applied as a slave to a free-pendulum clock.

Restore the electro-magnet to its normal form, and apply it to a half-seconds pendulum higher up and to one side of it, as shown in fig. 112.

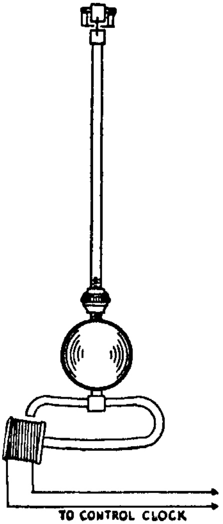

Fig. 111.—Brillié

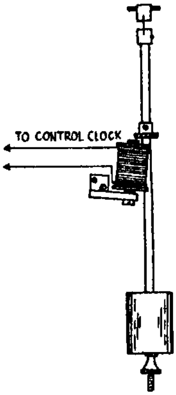

Fig. 112.—Propulsion and synchronization by circular error. Hope-Jones

Transmit to it the normal half-minute impulses of the Synchronome remontoire of the standard master clock or of a free pendulum.

Let the switch in the first place send a group of half a dozen impulses, one every 2 sec., just to start it swinging in phase; after which the half-minute impulses will alone suffice to maintain its vibrations and to hold it firmly in synchronization. This is accomplished by the automatic operation of a natural law, known as the circular error, whereby a smaller arc is performed more quickly than a long one owing to its path being a circular one instead of cycloidal, as we saw in chapter XIX.

If the pendulum is fast, the left-hand edge of its armature will be very slightly more in the magnetic field during the passing of the synchronizing impulse, with the result that the pendulum will increase its arc and get more and more into the magnetic field, receiving greater impulses until its excessive arc has slowed the clock to such an extent that its pendulum will reach a balancing point—an arc that will produce a rate in conformity with the clock that is transmitting the synchronizing signals. This arc is dependent upon the initial error of the pendulum. The limit will not be reached, even though the pendulum is so short and so badly out of regulation when uncontrolled that it would gain three and a half minutes per day.

Though the signal mainly expresses itself in an increased impulse to extend the arc of the pendulum and slow it, it exercises also a slowing influence in another manner. Since it is pulling the pendulum uphill against gravity, the impulse also will slow it, because it diminishes gravity and thereby decelerates that semi-vibration; but the value of this correction is small, because it is operative only once every half minute.

We will now assume that the half-seconds pendulum has a losing rate.

Being farther away from the magnet when the next half-minute impulse comes through, the boost, as a short sharp pull producing an immediate increase in arc is less than normal and the arc falls, thereby accelerating the clock. It will be sufficient to keep the clock going, but perhaps not much more. It will reach a balancing point as before, viz. that arc which will produce a rate in conformity with the synchronizing signals; but, inasmuch as the effect of the circular error diminishes rapidly as the arc gets less, the balancing point is reached very quickly, and only a very small losing rate can be corrected by this means.

If the losing rate is larger than the circular error is capable of correcting, you would expect the boost to be so small that the pendulum would come to rest. But the synchronizing impulses appear to "sense" this difficulty, and before there is any risk of the clock stopping they bring another force into play. When the circular error is beginning to lose its effective control the impulses begin to exercise their accelerating influence upon the pendulum in quite a different way. In the effort of the circular error to cure the losing rate we have seen the arc drop to a very low figure—a dangerously low figure. The kinetic energy of the pendulum is now at its lowest, its speed is comparatively slow, and it is susceptible to the slightest influence. Normally the pendulum travels rapidly through the magnetic field of short duration created by the half-minute synchronizing impulse, but now it is travelling so slowly that the signal has time to take hold of it and forcibly pull it forwards, advancing its phase.

The arc has not been increased more than is necessary to ensure safe going; consequently correction by circular error is still operative, but it is too weak in its effect, and we are beginning to rely more upon its forcible phase advance. I am unable to say at what precise point of time or arc the change takes place; as one influence fades out the other gradually comes in.

Each force will supply the deficiency of the other, and the pendulum will take up whatever phase relationship to the synchronizing signal is demanded by its primary error of regulation, which will result in the least correction necessary to maintain synchronization by maintaining the correct arc or by forcible alteration of its phase.

The arc-increasing impulse may be greater and the phase correction less, or the phase displacement of the pendulum may be greater and the increase of arc may be less, but they will adjust themselves to satisfy whatever conditions may exist within the obvious limitations dictated by the extent of the error in the length of the pendulum.

The pendulum cannot suffer a decrease of its arc without being automatically boosted back to normal, and it cannot increase its arc unduly without getting a little out of range and consequently falling back to normal; so it will find and keep its optimum position, viz. the arc that suits it best and keeps it in precise synchronization with the half-minute signal.

It is an extraordinary phenomenon, which leaves me wondering why nature and science provide us with such harmonic entertainment; but it could not be readily demonstrated on pendulums of seconds beat owing to their relatively small working arcs.

An infrequent impulse of high quality and a half-seconds pendulum are essential, the latter because of its rapid motion and because it lends itself to a large arc and light-weight bob. Bain, R. L. Jones, Ritchie and Bentley, and all those who experimented with synchronous pendulums in the Victorian era, missed this point, and it never occurred to them to make use of the circular error.

The outstanding feature is that the rate of the pendulum is almost uniform throughout each half minute, the change in time represented by the fall in arc during thirty vibrations being so small as to cause no embarrassment, even when using the slave clock for transmitting seconds impulses.

It appears to be ideal for performing the escapement function for a free pendulum, which demands not only that it should hold a continuous rate throughout the 29½ sec. accurately, but that the relative phase of the two pendulums shall remain constant.

It fulfils both these requirements throughout a long range of synchronization, provided the natural rate of the half-seconds pendulum is a gaining one.

CHAPTER XXIV

THE NATIONAL TIME SERVICE PROVIDED BY THE GRID, AND THE REGULATION OF ITS FREQUENCY TO AVERAGE GREENWICH MEAN TIME

HIS MAJESTY'S GOVERNMENT conferred a blessing upon the nation when they set up the Central Electricity Board in 1927 and authorized its co-ordination of the nation's electricity supply by means of the "Grid"—the blessing of uniform and accurate time for the whole community. But they had no such beneficent intention, and in fact they were actually unaware that they were doing it.

In an article on electric clocks that I wrote forty-four years ago in *Lightning* (the forerunner of the *Electrical Times*) in the issue of November 15, 1895, I was speaking of Ferranti's bold introduction of alternating current at the Deptford Station as having proved its economy in the generation and distribution of electricity, and added:

"A standard clock may be placed in the engine-room at the central station of an alternating system, and with it a dial, the hands of which are rotated by a tiny synchronous alternating-current motor connected to the mains; the gearing between this dial and its motor being such that when the alternators are run at their normal frequency the hands progress at the proper rate, and thus any consumer who joins a similar dial across the mains will obtain the same result."

The adoption by the Central Electricity Board of alternating current (to the ultimate banishment of D.C.), and the establishment of 50 cycles per second as the uniform "periodicity" for the whole country, provided the basic conditions for a national time service. There is, however, no reason to suppose that the authorities ever thought of it. The law then required an accuracy of only 2½ per cent in the frequency, equal to a clock error of about half an hour per day. They did not need greater accuracy; it brought no technical benefit to them in their electrical engineering problems; time was a waste product.

That the ideas of timekeeping in some Government Departments are very modest, if not altogether amissing, may be gathered from the Meter Testing Act of ten years later (1937), which demanded that the clocks used for testing shall not vary more than 30 sec. per day!

Yet we have succeeded, and the frequency of the Grid is now maintained at a periodicity of 50 cycles per second to average Greenwich mean time within a few seconds.

It is a national failing that we are content to follow other countries, but when we get going we avoid their mistakes and provide a better service. As in broadcasting so in the telephone talking clock and the national time service provided by the Grid we ultimately excel in efficiency and reliability.

Alternating current was always more generally used than direct for electric light and power in America, so it was natural that they should be first to use it for time distribution, and their introduction of synchronous motor clocks began in 1918. It was then that Mr. H. E. Warren of Ashland, Mass., designed his frequency meter to assist the engineers in the generating stations to keep their alternators running to time and the little synchronous motor of the Telechron clock, which found a ready market throughout the United States of America.

Messrs. Everett, Edgcumbe & Co. were the first to supply our wants on this side of the Atlantic, using the same system under the title of *Synclock*, and their enterprise led the way to the equipment of a large number of generating stations with clocks of the superior accuracy always associated with the typically British electric master clocks normally used to operate circuits of electrical impulse dials. Hundreds of these master clocks are now in use for frequency checking, grid metering, and meter testing. Many of them, but alas! not all of them, are carefully rated and checked daily against the wireless six dot seconds.

Frequency checking is merely the comparison between two clocks in view of the switchboard attendant, one showing Greenwich time and the other showing frequency time, driven by a synchronous motor on the alternating current produced. Or there may be two concentric hands on the same dial, and also a differential movement giving a direct reading of the error. From the first it was recognized that the minute hand of an ordinary clock moved too slowly to enable a sufficiently close comparison to be made. A more open scale was required, and special dials were made showing first 5 and then 4, 3 and 2 minutes for one revolution, thus indicating the progress in the improvement of frequency timing during the first few years, until in 1933 I was permitted to install dials with a still more open scale in the form of ordinary clock faces with the addition of a centre-seconds hand making one revolution per minute, and have done so ever since. The dial operated by a synchronous motor has red hands, and it is running a perpetual race with the Greenwich dial, whose hands are black, both of them being provided with "jump" seconds which I prefer to the creepy crawl of continuous motion. The method is illustrated in fig. 113. The motor rotates a little disc once per second. A pin on this disc acts as a one-leaf pinion and picks up the 60 teeth of the centre-seconds hand. If the frequency dial lags behind Greenwich time, the engineer speeds up the turbo-alternators.

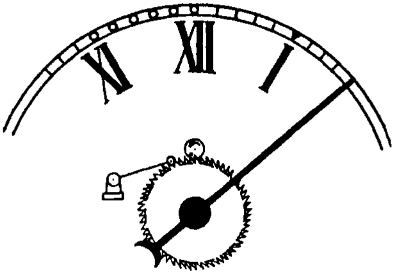

FIG. 113.—A 1 : 60 reduction gear giving jump seconds

But before discussing frequency checking clocks, let us consider what is involved in the regulation of the speed of the heavy machinery. As its name implies, a turbo-alternator consists of a turbine coupled to an alternating-current generator. The turbine is controlled by a governor, which consists of two weights taking up a position dictated by the outward pull of centrifugal force corresponding to the speed against the inward pull of a spiral spring connected to each, more or less steam being admitted as the load of the generator varies. It is illustrated in fig. 114.

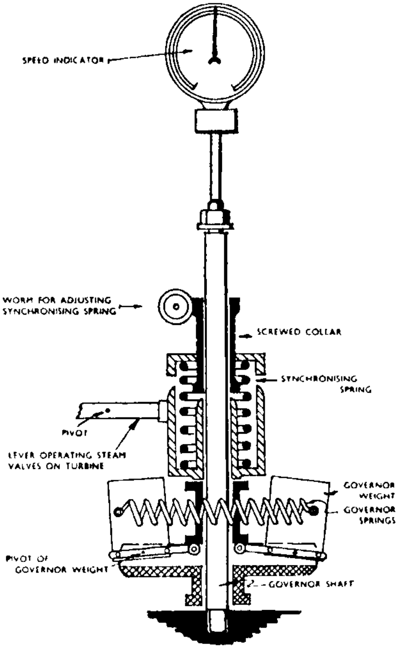

FIG. 114.—Engine governor

The load and hence the speed of the set is influenced to some extent by other generators that may be working in parallel with it, feeding into the same network. If a generating station is slightly speeded up, it will automatically help itself to more than its share of the work and will be guilty of "load snatching" from the "pool." The other stations being thus deprived of their full share will automatically speed up also, in order to re-establish an equilibrium. This transference of load is liable to cause an oscillation or "load-swing" as it is usually called.

To secure even distribution all generators connected in parallel must be exactly in step; not merely as regards the number of cycles per second (which is our scale of time measurement), but as regards phase (which is the scale of the engineer). This latter is achieved by the use of a "synchroscope" when switching in.

Let us not forget that the main business of the electricity undertakings is to supply electricity, and that they have quite enough to do to handle the difficult situations caused by sudden and unexpected demands such as may arise from the occasional breakdown of a neighbouring station, or a sudden November fog which will plunge a city in darkness and demand a peak load at noon that is not normally expected until some hours later.

On such occasions the first duty of the control engineer is to turn out as many kilowatts from the stations under his control as the consumers require without any particular regard to the timekeeping of his system. If in this process the time wanders, he will correct it when he can, and under normal conditions he can maintain an average speed in conformity with Greenwich mean time, introducing such small and gradual fasting or slowing as may be necessary to bring his frequency indicating dial into conformity with his Greenwich mean time dial.

Skill and watchfulness are essential in the control of large modern generating machinery. Manual control has not yet given way to automatic methods. It is exercised by applying pressure to a spiral spring surrounding the governor shaft, which enables an alteration in the setting of the steam valve of the turbine to be made under the final regulation of a worm on the screw collar of the governor as shown in fig. 114. In modern practice the ultimate operation of the steam valve is accomplished by oil under pressure which provides a most delicate "vernier" control.

From the foregoing it will be seen that, in the country as a whole, the timekeeping of each interconnected system depends on the adjustment of all the stations feeding it. It is therefore obvious that the closer the separate interconnected systems run to Greenwich mean time the less will be their divergence when called upon to link up with a neighbour.

Hence the success of national timekeeping depends primarily upon having Greenwich mean time at national and area control centres.

A full realization of the responsibility of our generating stations really demands that they should be served directly from Greenwich Observatory by Post Office landlines. Failing that they should be equipped with the best clocks available, such for instance as the free pendulum used throughout the world's observatories for the determination of time itself.

Under the Grid the country is divided into seven systems, with a control station in each. It is here that the best clocks are wanted, and it would be all to the good if the generating stations had them as well.

Enough has been said to show that timekeeping by the Grid is not a particularly easy job, and it must be admitted that the British public have no right to ask for it: yet we are confident that it will be provided. It will facilitate their own co-operative working and will meet a national demand.

A good example of group control is that of the London Power Company, at whose headquarters they have a Synchronome master clock of the *Synclock* type, which transmits seconds and operates large centre-seconds dials in their five outlying generating stations over their own wiring network.

Since 1937 the master clock operating a large circuit of electrical impulse dials in Broadcasting House, Portland Place, has been under the automatic correction of a "hit-and-miss" synchronizer operated on the six dots received from Greenwich on their landline, with the happy result that the seconds indicating dials in all their studios have been advancing beat by beat in harmony with the official mean time pendulum at Greenwich observatory. There is no reason why all our generating stations should not be similarly equipped.

In the meantime there is nothing to prevent the supply of the best possible frequency checking clocks at a reasonable cost, and my proposal is one with an absolutely free pendulum on the lines of that described in chapter XXII, fig. 108.

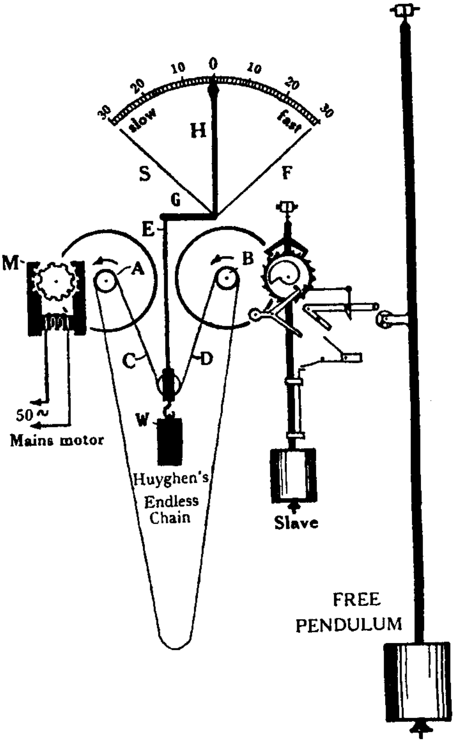

FIG. 115.—Free pendulum clock for frequency checking

We there saw a free pendulum waited upon by a little slave clock with an escapement and a pendulum beating half seconds. It may of course be driven by a spring or weight wound up by hand or by any form of electrical self-winding action, not necessarily by the Synchronome remontoire which, however, appeared in figs. 109 and 110.

A synchronous motor has much to recommend it, particularly when used to lift a weight supported on a Huyghens' endless chain, whereby it will provide a reserve in case of breakdown. By the happy thought of Mr. W. T. H. Gwinnell, whose design is illustrated in fig. 115, the motor is run at a speed that will restore the power at exactly the same speed at which it is expended. This arrangement acts as a differential frequency indicator showing in seconds to what extent the frequency has wandered fast or slow, the pointer being directly coupled to the driving weight whose rise and fall constitute *ipso facto* the differential.

It will be seen from the figure that the pendulum on the right is perfectly free and that the slave clock on the left lifts a little finger and drops it on the roller every half minute. The release is effected by a pin on the escape wheel, and the resetting action is sufficiently indicated by a two-armed counter-balanced lever operated by a cam. The synchronous motor M driven from 50 cycles A.C. derived from the Grid continuously winds up the driving weight W by means of a sprocket wheel A, but the speed of winding is exactly the same as the speed of unwinding, so that if the free pendulum is measuring really accurate Greenwich mean time and the frequency of the motor is also correct, the weight will stay precisely where it is because the left arm of its pendant supporting chain C is being drawn up at the same speed that the right-hand side of the loop D is running down off the sprocket wheel B in driving the clock. One benefit of this is a long run on reserve power in the event of a breakdown of the electrical supply, but there are other advantages. Any movement of the floating weight indicates a variation of the A.C. frequency. The weight thus acts as a differential and is connected to a pointer on the dial H by means of the trace E and link G, thereby showing lead and lag of the frequency against Greenwich mean time without any gearing. The subsidiary pointers F and S, which are "push" fits on their studs, will be seen right and left of the differential pointer. They act just as a pointer on a maximum reading barometer or thermometer to indicate to the station engineer how far his frequency has transgressed fast or slow since he last set them.

But even this free pendulum checking clock does not reach finality: we ought not to be satisfied with anything less than automatic control of frequency from Greenwich as an ultimate ambition. In the meantime the public has a fine service.

It is given to few men to see their prophecies fulfilled, to shape the destiny of their pet scheme, and to forge the links of the chain that bring it to fruition. This has been the happy lot of the author, whose prophecy forty-four years ago is quoted at the beginning of this chapter.

CHAPTER XXV

SYNCHRONOUS MOTOR CLOCKS

The revolutionary character of a synchronous motor clock is sufficiently evident in its nest of revolving wheelwork, but the revolution it has caused is infinitely greater than that of the wheels inside it.

One would expect as a consequence that the art and science of accurate time measurement as a cult of the clock enthusiast will die out. This would be a pity, because that large class of scientific amateur mechanics of which they form a part has originated most of the inventions that give us the lead in science among the nations.

The loss of a hobby may well be a subject of mourning, but as a set-off to those influences we have the improved clock consciousness of the community, directly resulting from the applications of electricity to horology in circuits of electrical impulse dials, in accuracy of time measurement, in wireless time signals, in the National A.C. supply co-ordinated under the Grid and finally in the Post Office talking clock.

There is no instrument or mechanical contrivance taking congizance of time that will not soon be motor-driven, provided it is within reach of a timed A.C. supply. Beginning in their own home we see them driving all those instruments that measure and record the flow of electricity in volts, amperes, and watt-hours on the switchboard of generating stations. Employees' time recorders of every kind are now motor-driven, or soon will be. Automatic switches for street and shop window lighting are under their control, as also programme clocks that ring bells at prearranged times. It brings unexpected benefits to the bedroom alarm clock. Not only does it keep good time, not only is it entirely automatic, requiring no winding, but it will repeat its *reveille* at the desired hour every morning without resetting, and will illuminate its face simultaneously.

As we have seen, the idea of using the A.C. electric light supply with timed frequency to operate clocks was proposed so long ago as 1895, but was first introduced in the United States in 1918 by Warren, the pioneer of frequency checking and the inventor of the Warren synchronous self-starting motor. It was popularized under the name Telechron, and the factory that produced it in Ashland, Massachusetts, has been doubled more than once.

When he began the only A.C. motors in common use were quite unsuitable for running small clock dials. Warren assumed self-starting to be a *sine qua non* and devised a motor whose construction is shown in the two sectional drawings on the opposite page, figs. 116 and 117. The electromagnet is provided with copper shading rings C, which produce a rotating field. The armature, consisting of two iron discs D, is situated within this field and rotates in absolute synchronism with the frequency of the supply owing to hysteretic drag. The spindle carrying the disc is geared down so that the main spindle revolves either once a minute or once a second as desired. All the moving parts are enclosed in a dust-tight housing containing oil in which the working parts are immersed. The genesis of the rotating field by the alternating current is due to the retardation of the growth of the magnetic field in that part of the poles which are enclosed in the copper rings. In each 1/100th part of a second the current gradually rises to a maximum and the unshaded portion becomes fully magnetized, whereas the growth of the rest in the shaded part is delayed. The rise and decay of the magnetic field in the shaded portion are thus out of phase with the energizing impulses.

Warren having thus proved the practicability of this method of timekeeping and having created the conditions and the market for it in his own country, the problem of fractional h.p. synchronous motors suitable for clocks attracted the attention of the electrical engineering profession with very satisfactory results. Inventors vied with each other

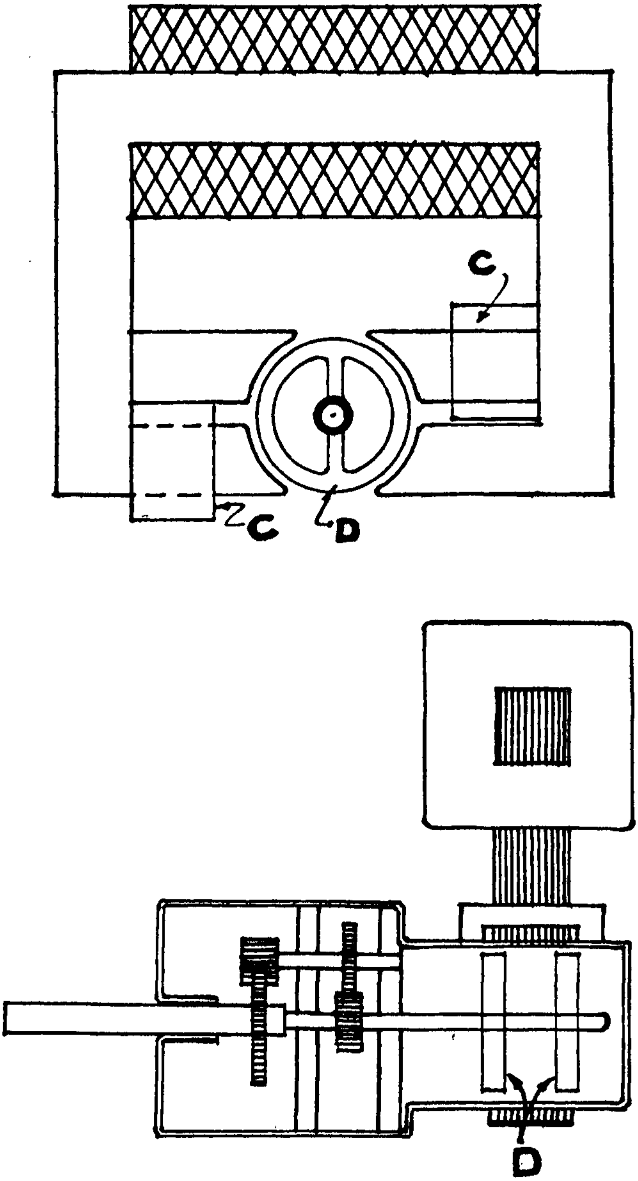

FIGS. 116 AND 117.—Warren's synchronous motor

in "ringing the changes" on the application of the well-known principles underlying hysteresis and induction motors and expressed them in a variety of ingenious designs.

The rotor disc of a Warren motor revolves once per cycle, or 3,000 r.p.m. on the English periodicity of 50 cycles per second, or 3,600 r.p.m. in the United States. This involves reduction gear of the ratio of 1/3000 to produce a "seconds" dial revolving once a minute. At that stage one proceeds to make a clock of it by a further reduction of 1/60th for the minute hand and then 1/12th for the hour hand. Although excellent in its design, with its gearing housed in a case no bigger than an egg and running in oil, it is obviously desirable to reduce the ratio by reducing the r.p.m. of the motor itself, and, when mass producers became attracted, diligent research was devoted to the subject of slow-speed motors. The construction most commonly adopted utilized a bi-polar stator with a number of serrations on each pole, and a rotor consisting of a disc with poles or teeth and gaps of the same pitch as those in the stator. The speed of rotation is reduced as the number of poles in the rotor is increased. Divide the number of current alternations (half-cycles) per minute by the number of teeth in the rotor, and you have its speed in r.p.m. A typical motor of this type is shown in fig. 118. This usually has a rotor with thirty teeth and runs at 200 r.p.m. on a 50-cycle supply. This type of motor became known as the toothed-disc type, but an electrical engineer would call it a simple repulsion motor. It is simple in construction, easily made, and fairly reliable in action; hence it is still the most popular type on the market to-day.

The new cobalt steel alloys, with their powerful permanent magnetism and their ability to retain it, have been of great value to designers of small motors of this and similar kinds.

Dr. E. A. Watson, who has carried out much research work on this subject in association with the well-known London firm of Smiths at Cricklewood, has made effective use of permanent magnetism which is a feature of all the products of this firm.

Other types frankly adopt standard A.C. motor practice in the form of miniature reproductions of single-phase induction motors. A good example of this is that made by the Westinghouse Company; the Sangamo Company also have adopted this pattern in the motors they supply for maximum demand indicators, and have produced an interesting variation that combines two motors in one. The main rotor behaves like that of an ordinary squirrel-cage motor and tries to run at a relatively high speed. On the same spindle is a small polarized piece which forms a synchronous motor, the latter controlling the speed whilst the former develops the torque.

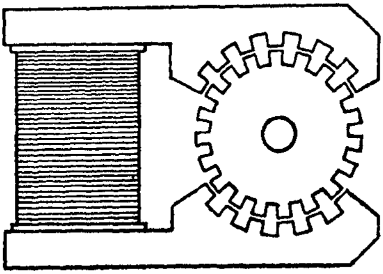

FIG. 118.—A.C. multipolar synchronous motor

Another type of self-starting motor is that of the Ferranti Company, one of the many described in the exhaustive paper read before the Institution of Electrical Engineers by the late Mr. W. Holmes and Mr. E. Grundy in 1935. A simple polarized rotor has some of its poles displaced with relation to the stator, producing an oscillation which increases until it runs into step with the frequency. This result may be achieved also by introducing on the main rotor a soft iron element in the form of a spider, so arranged that the ends of the legs take up a position between adjacent stator poles when the rotor is at rest. A similar oscillation increasing in magnitude occurs until the rotor falls into step. In both types the direction of rotation cannot be predetermined by design, for at the instant it reaches synchronous speed it may be rotating clockwise or anti-clockwise, but the latter is prevented by a non-return or "free wheel" pawl.

The efficiency of all the various types of synchronous clock motors which we have mentioned above is naturally very poor, but, since an ordinary 12 in. clock dial only requires, let us say, 1/20,000,000th of a h.p. to drive its hand, the power of the weakest of them is ample and the consumption of electricity, although a great deal too high, is not felt in domestic use.

Why should more energy be required to turn the hands on a dial? They meet with no resistance in their path. If the current is sufficient to revolve the rotary armature of the motor at all, then, since the increase of power goes hand in hand with the reduction of speed, you will find that the hour hand could carry a considerable weight uphill between VIII and X.

Thus comes the realization in all its brutality that the science and skill of the clockmaker are no longer required. An ordinary clock began with a storage of power, diluting it to the delivery of a million impulses of uniform value to an escapement every week. What a marvellous achievement, implying almost frictionless wheelwork and perfect workmanship! The synchronous motor clock on the other hand, having no storage of power nor escapement, requires neither. But however much efficiency may be improved, the consumption of current can become of serious magnitude whenever the mistake is made of equipping a large building with synchronous motor clocks instead of electrical impulse dials.

Some of the synchronous motors we have described are commendably more efficient than others, and considerable improvement is to be expected—in fact is already on the way.

It occurred to me that the relatively poor torque was due to the effort of the magnetic impulse resulting from each half-cycle of the supply to move the rotor a distance equivalent to the whole space between two adjacent poles of the stator. And the desire to reduce the space between adjacent poles of opposite polarity results often in the stator being in itself almost a continuously closed magnetic circuit, so that only part of the flux generated is available to act on the rotor.

So in 1934 I devised a motor using a polarized method in which the magnetic impulse resulting from each half-cycle of the electrical supply endeavours to move a rotor a distance equivalent to only half the space between two adjacent poles.

It is illustrated in fig. 119. The stator CD is of steel and cylindrical in form and is magnetized axially so that its opposite ends (each provided with internally toothed rings) are of opposite polarity. The rotor B consists of soft iron in the shape of a bobbin with a fixed winding between its cheeks. The polarity of these cheeks (which are fringed with teeth) consequently changes every half-cycle, whilst the stator poles facing them are strongly and permanently magnetized north and south, so that each half-cycle has an effective pull and the movement of the rotor is equivalent to one tooth space distant per complete A.C. cycle instead of half a cycle.

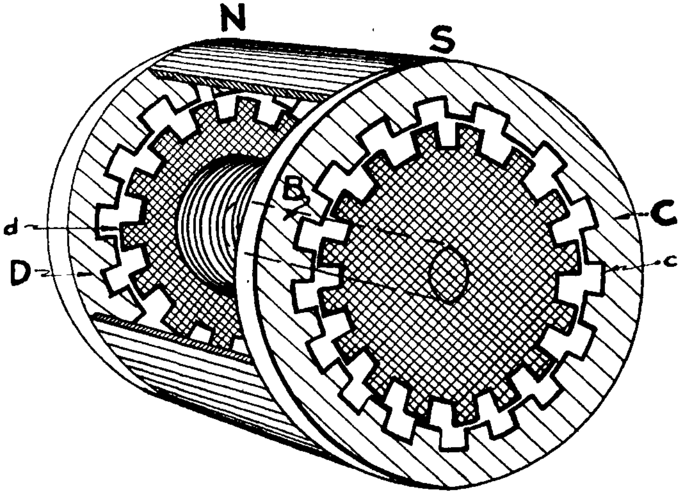

Fig. 119.—Axially magnetized stator. Hope-Jones

The design of this motor presented some practical difficulties, but its general principles were proved to be sound, and success has now been achieved in the production of a motor running at that most convenient speed of 60 r.p.m., or one revolution per second, with an efficiency that I have not found equalled in any other.

It will be observed that the use of permanent magnetism in the stator usually precludes the possibility of self-starting. Warren regarded self-starting as indispensable, and when synchronous motor clocks were young quite a controversy ranged round this question. Taking it for granted, mankind and all his works being human, that even our national Grid system might break down, you must make up your mind whether you would prefer a clock that stops altogether, or one that having stopped will start up again at a wrong time.

In the case of a non-self-starting clock the problem is very simple. The provision of a seconds hand leaves no doubt as to whether the clock is running or not, and if it has none one can achieve the same result by attaching a coloured disc to the rotor shaft which can be seen through a little window cut in the dial.

Self-starting clocks on the other hand are always made to exhibit the red flag through the window when the current fails, and that danger signal remains even when the clock starts again on the restoration of the supply, as a warning that it is indicating the wrong time.

CHAPTER XXVI

SYNCHRONIZATION FROM A.C. MAINS SUPPLY

Since the introduction of synchronous motor clocks the question is often asked: how do they compare with installations of electrical impulse dials for the purpose of providing a service of uniform and accurate time in large premises and institutions?

The arguments for and against each method have often been arrayed in parallel columns, but we will summarize them thus—

It is first necessary to ascertain that the building concerned is served by alternating current, that the periodicity is 50 cycles per second, and that this periodicity is reasonably accurately timed at the generating station. If these conditions are not fulfilled, you will have to install a circuit of electrical impulse dials.

Prime Cost. A comparison of the makers' catalogues will show that any ordinary type of wall clock likely to be selected costs much the same for both types; but there is this difference, that a master clock is required for the impulse dial system.

Running Cost. Synchronous motor clocks consuming an average of say 30 B.O.T. units per annum, at 1d. per unit, would each cost 2s. 6d. per annum, and fifty would cost £6 5s. per annum, whereas the current consumed by electrical impulse dials is negligible.

Wiring. Every synchronous motor clock must be wired for as an electric lighting point, but must not be under the control of any switch or at the mercy of any fuse, except as demanded by insurance regulations. Electrical impulse dials on the other hand require only a simple series circuit of 3/·036 in., carried as a single line from one dial to the next, as a loop beginning and ending at the master clock.

DAYLIGHT SAVING CHANGES in synchronous motor clocks are a nuisance. Each dial has to be set carefully by hand, and this can be done only when the rooms are available. Usually some are forgotten or set a few minutes wrong. "Insertion" types are usually barred because of the inaccessibility of their movements. Impulse dials on the other hand are set collectively from the master clock in one operation.

The consideration of these pros and cons leads us to the obvious question as to whether one system cannot help the other. Is the timekeeping of the Grid already good enough to offer assistance to independent installations? The master clock of an electrical impulse dial installation has to keep its own time unaided. However good it may be, it will run out of time ultimately if left unattended. The master clocks in the control rooms and generating stations, which may be of the very same type, have the advantage of being under the daily observation of engineers with the six-dot seconds wireless signals to help him keep them correct and to run the stations accordingly.

Thus the Grid has something to offer to installations of electrical impulse dials, and English manufacturers have not been slow to realize it. The first idea was to use a synchronous motor to substitute a master clock by making it transmit an impulse every half minute, but this involves the stoppage of the installation in the event of a breakdown of the electric light supply. Not many years ago such a contretemps would have been accepted with equanimity, but the national conscience has since been awakened and the standard of time service has been raised. Consequently every firm of electric clockmakers that launches a system of electrical impulse dials employing a synchronous motor to produce the half-minute operating contact, realized the necessity of a reserve supply of timed A.C. and provided it in the form of its own little local generating station to take up the duty automatically in case of a mains failure.

Such is the Smith bi-synchronous system, which cuts up direct current from a local battery by means of a tuning fork into fifty pulses per second, substituting the A.C. supply when necessary; and that of the Telephone Manufacturing Company is designed on similar lines. On the other hand the D.A.C. chronometer system of Gent uses a little D.C. motor to take up the load when the current fails. The Synchronome Company, with that faith in the merits of their remontoire which we should expect, substituted a small synchronous motor for their pendulum as illustrated in fig. 120. They distrusted the rather soulless contact of arbitrary duration which was all that could be looked for from a motor-made contact, and wished to retain their battery warning; so they arranged that their motor should fulfil all the functions of the pendulums excepting only time measurement. The middle wheel revolves once every 2 sec. and gathers the 15T wheel by means of a pin acting as a one-leaf pinion. When the release of catch takes place the roller runs down the periphery of a cam, which is so shaped that the action of the pendulum is precisely simulated and all the advantages of the Synchronome switch are retained, including battery warning. Actually a 60T wheel is used with two pins so as to give dead-beat seconds on the dial. The substituted A.C. is generated by a vibrating reed, whose speed is controlled more by its mass than upon its electro-magnetic impulses.

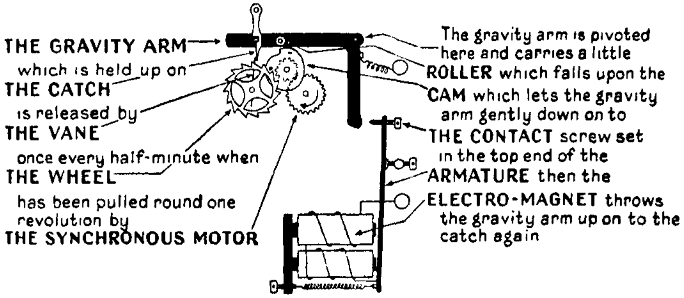

FIG. 120.—Synchronome switch operated by A.C. motor

They say there are blind spots in everybody's brain, and I struck one in mine when I devised this in 1934. These new and rather disturbing circumstances and conditions do not call for the invention of a new system of electrical impulse dials whose master clock shall be motor-operated on the Grid. It is a synchronizing problem. Installations of impulse clocks can be safeguarded from the accumulation of small errors by using the Grid to synchronize their master clocks, not by designing new ones.

How is it that some men whom we have never credited with any conspicuous ability shoot up into the highest positions in commercial life and achieve distinguished careers as directors of great mercantile concerns? Simply that they have the gift of organization, which usually boils down to the ability to choose the right man for the right job. Let us profit by their examples and ask the Grid for the one contribution which it is competent to offer to its sister service of electrical impulse dials. It is not competent to do more because of its liability to breakdown.

We need no excuse for our failure to realize this before. To an horologist synchronization can only imply, and can only exist, as an occasional signal from an accurate source of timekeeping applied to correct an inferior clock. To reverse the process and correct the superior from the inferior would suggest lunacy. Yet that is what we are now boldly proposing to do since the Grid frequency is admittedly more irregular than the average master clock. The apparent paradox is explained by the fact that even the best master clock will get out of time if its error in rate, however small, is allowed to accumulate, whereas the comparatively irregular timekeeping of the Grid is frequently checked and correction applied.

The position is similar to that which faces the astronomers in the world's observatories to-day. Their transit observations are irregular in detail, but in bulk they constitute our time standard. The record on a chronograph would appear as a zigzag, but a line drawn through the middle of the zigzag would be straight. The free pendulum clock on the other hand appears as a smooth line, and the function of the transit observation is to keep that line straight whenever it shows a tendency to change its direction.

Accepting then a little synchronous A.C. motor, representing the "zigzag" performance of the Grid, as the source of our synchronizing signal, how often shall we help ourselves to it—every second, once a minute, once an hour, once every six hours, or daily? And how shall we apply it? It is a new problem in synchronization, but it presented no difficulties to our friends across the Channel. Those responsible for the French systems of electric clocks were never in any doubt: they did not even need to stop to think, because their master clocks and most of their independent self wound clocks are provided with pendulums beating half seconds, 9·85 in. long, and there was no difficulty in imposing the Grid frequency upon them.

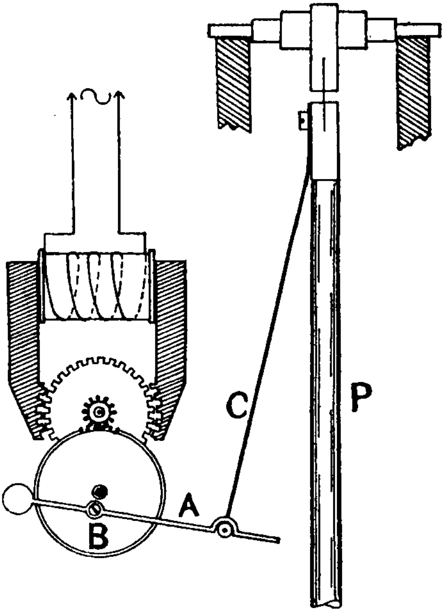

FIG. 121.—Forcible control of a pendulum from the Grid

Take for instance the Féry, Brillié, Hato or Bulle clock represented by fig. 111, chapter XXIII, and imagine the addition of a few turns of wire on its electro-magnet. Any synchronous motor, whether made up as a clock or not, can be used to make a contact every second to send an impulse through those extra coils, and thus enable the A.C. supply to dominate the master clock regardless of the latter's maintenance, which will carry on in case of the breakdown of a generating station.

A half-seconds pendulum is naturally amenable to ruthless alteration of its phase. It is so small and light that there is little kinetic energy stored up in its bob; consequently it can be pulled about with ease and made to conform to every irregularity of the synchronizing signal. A mechanical analogy of this is shown in fig. 121, in which a wheel of a synchronous motor revolves once per second. It carries partly counterbalanced crank A pivoted at B engaging with the spring C which propels the pendulum P or corrects it, and even if it is not of precisely the right length the spring is strong enough to force it to swing in phase with the A.C. supply. It is a simple combination of two harmonic motions.

It is not easy to apply this to a seconds pendulum, but it is possible to do so. One realizes that such treatment is brutal, and it must in any case be put out of gear automatically if the current supply from the mains breaks down.

Unfortunately a synchronizing signal of varying precision is not palatable food for a hit-and-miss synchronizer, otherwise this old friend of ours would handle the situation neatly.

The method of synchronizing which I advocate is one which is suitable for application to all those types of master clock which are based upon the Synchronome remontoire or which use a pendulum to rotate a count wheel.

All you have to do is to mount a heart-shaped cam on the arbor of the count wheel and apply a self-starting synchronous motor provided with a little pivoted lever which lifts out the gathering pawl and the backstop and gently but firmly pushes a synchronizing finger against the cam.

A synchronous electric clock motor with its wheels continuously rotating at different speeds is ideal for such a purpose. It is easy to select those which will perform the synchronizing function once an hour or whatever periodicity is necessary to make it impossible for the Grid to throw it into a wrong half minute.

Those who pin their faith to the time-keeping of the Grid need to be reminded, if they are concerned with the equipment of large buildings, of the superiority of circuits of electrical impulse dials. They can now reap and combine the advantages of both.

CHAPTER XXVII

TIMEKEEPING AT SEA

It is not so long ago that every country adopted a time of its own, based more or less on the longitude of its capital city. Reform was demanded by the rapidly increasing speed of communication, but it was not until 1883 that the American Railways adopted the four-hour zones, Eastern, Central, Mountain and Pacific time, and set the pace for the division of the world's surface into twenty-four-hour slices of 15° of one hour each.

Many remember the day when Dublin and Ireland were twenty-six minutes slow of Greenwich, and France, which was nine minutes and twenty seconds behind it, did not change until 1911. Strange that the world should have had to wait so long for such an obvious and rational reform which brought order out of chaos! Now that the centenary of the birth of the "Galvanic telegraph" (as Sir Charles Wheatstone called it in 1838) has been celebrated, one wonders how the world got on without zone times in the half-century which followed it when half its telegrams must have been late and the rest received before they were despatched!

And how did it affect life on board ship? Not at all: they were not interested. Isolated communities do not concern themselves with their neighbours' timekeeping. Our mercantile marine had inherited the eight bells of Drake's day. Each ship kept its own time, based upon sunrise, sunset and the meridian transit at noon. That method of timekeeping seems rather crude, and it might well be thought that the introduction of hourly world zone-time would have improved it: but it did not. Apart from the chronometer, the timekeeping on board merchant ships and ocean liners is just as casual as it was in Elizabethan times; in fact, I think it is rather worse, because it is deprived of the three cardinal points of sunrise, noon and sunset.

The superior knowledge begot of the chronometer and time-zones, together with the world-wide use of clocks, has resulted in the alteration of the ship's time by an arbitrary amount each night—a duty usually performed by the cabin boy in a happy-go-lucky manner. This method has only been slightly improved upon to-day on ocean liners although they are equipped with electric clocks, owing to the careless way in which these installations are handled. On a trip round the world, I found that the Wireless Officer on seven different vessels looked upon the ship's time as a joke. He himself was

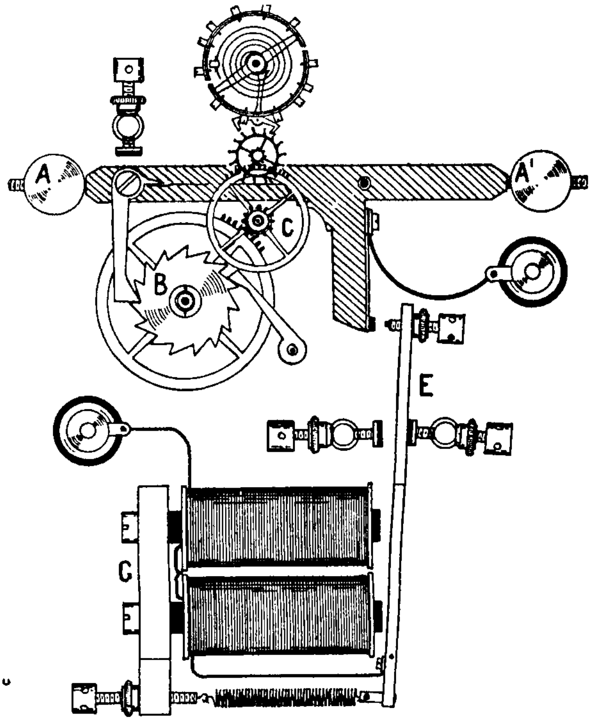

Fig. 122.—Marine master clock

precise in timing his messages, for which purpose he used his own watch.

In the early years of this century, I installed circuits of electrical impulse dials in some ships in Liverpool—the first to sail from that port so equipped and employing the Synchronome remontoire, then a comparatively new invention, as the master clock. It is shown in fig. 122, in which the driving lever A is partly counter-balanced at A^1 to add to the mass and reduce the effect of the ship's motion. It drives the escapement through ratchet B and wheel C, and is reset by armature E and magnet G every half-minute. Facilities were provided for rapidly setting forward all the dials from the master clock in the chart room, consisting of a press button which would advance them half a minute every time it was operated and an automatic "memory" device for setting them

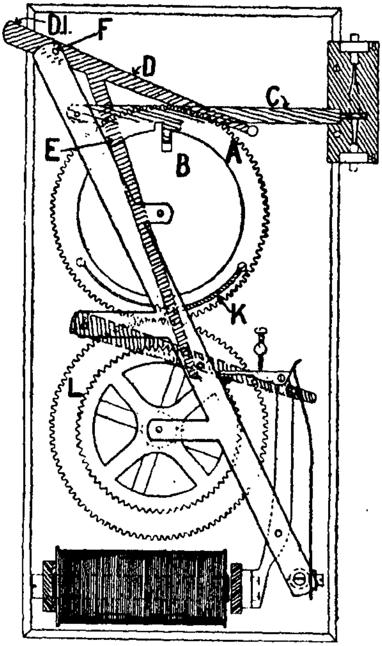

FIG. 123.—"Memory" device. Hope-Jones

back which is illustrated in fig. 123. The "memory" device consists of a flexible tooth enabling the pilot dial to be set back to any extent provided it is less than one hour. The first effect of this movement is to disconnect all the impulse dials in the ship; they must then await the return of the minute hand to the position from which it was moved before they are automatically switched in.

The lower half of fig. 123 shows a standard Synchronome electrical impulse dial movement with the addition of a 120T gear wheel L on its arbor, engaging in a similar wheel A above it which carries a slotted disc B, normally locked by the double pole switch arm C. A two-armed lever D E is centred at F. When its rear end is depressed at D^1, arm D reverses the switch C, thus preventing the electrical impulses from passing through the dials throughout the ship, whilst arm E disengages the driving pawl and backstop click of the impulse dial movement from the wheel.

The minute hand squared on to the arbor of the wheel L may now be turned backwards and wheel A will go with it as far as it is desired to delay the ship's clocks. The disc B will support the switch arm C in the meantime and until the master clock and the pilot dial movement has returned it to the position from which it was moved.

In the meantime, the dial movement itself is always free to progress because the wheel A is provided with a flexible tooth K, with adjacent teeth cut away. As a memory device, this is much more simple and economical to produce than the differential gear which is customarily used for such a purpose.

But an escapement was also designed with a long range of time control. It could be set to gain or lose forty minutes in the twenty-four hours, which was ample to equalize the daily change of longitude in the greyhounds of the Atlantic of those days.

The idea was that all the clocks on board should be set to gain or lose according to the Easting or Westing that would be effected during the next twenty-four hours. When the daily ceremony of shooting the sun took place and the sextant made it noon, the clocks would be found already at twelve.

The suggestion was pressed upon the ship-owner of that day without success. It was turned down by the marine superintendents, doubtless on the advice of the captains of the fleet, to whom it would appear to be too revolutionary even to justify a trial. But much water has flowed under London Bridge since then, and we have discovered that we were slaves to the convention of the clock until Willett taught us that Time should be the servant of Man.

The plan was aimed at giving the passengers the mean solar time to which they were accustomed on shore, and accompanying them across the ocean, always correct according to whatever longitude they might be in at any moment. Sleeping or waking, the passengers would never know that their days and nights were longer when travelling westwards and shorter when going eastwards. The crew would bless it since the watch on deck would be exactly proportioned to the watch below. Duty and rest would both be equally longer when going West and equally shorter going eastwards. The chronometers in the chart room, would, of course, be sacrosanct and checked by wireless time signals as heretofore.

Let us forestall the humorist by assuring him that the galley will be provided with an ordinary clock, and that the eggs will not be hard-boiled on a westerly voyage and underdone on an easterly one! On a fast liner, sailing due east and west, the difference on four minutes would be ten seconds.

On leaving port to cross the Atlantic, for instance, the passengers would be invited, in the liner's own daily paper, to ignore their watches throughout the voyage, and when arriving at Sandy Hook, for example, they would be instructed that after passing the Statue of Liberty they should set their watches by the ship's time, which would be found to conform to Eastern States' time and would remain so, as long as the ship was in that time-zone.

The balance wheel escapement of a master clock designed to run fast or slow as if it were a watch with its regulating lever calibrated to read in minutes per twenty-four hours on a control dial, has been mentioned. Such a dial is illustrated in fig. 124, showing minutes gained per twenty-four hours on the right, i.e. Easting, and minutes lost per twenty-four hours on the left, i.e. Westing. But a range of that magnitude will appear at first sight to be impossible. In the Foliot balance of the fourteenth century, the fore-runner of the balance wheels in watches and in the ship's chronometer, the period is dependent almost entirely upon its moment of inertia, and hardly at all on the torsion of its suspension cord.

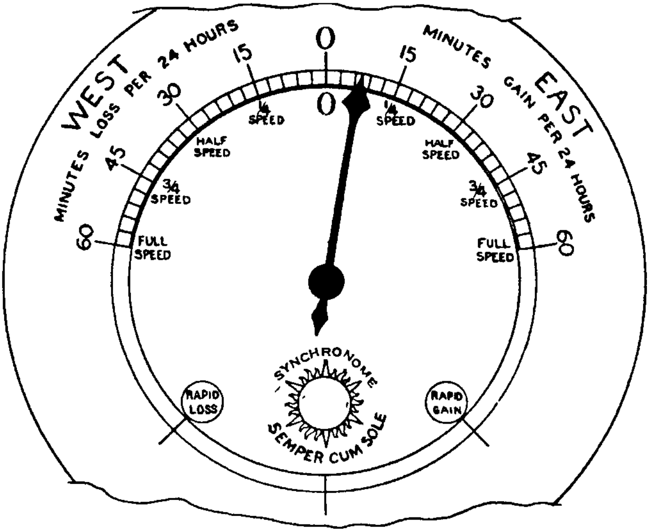

FIG. 124.—Control dial for ships' time. Hope-Jones

These conditions must be reversed and we must control a very light balance wheel with overwhelming energy in the spring.

But why should we be dependent upon clock escapements at all? Why not set up a small motor generator as a master clock, and instal synchronous motor clocks throughout the ship, by varying its periodicity to run fast or slow as the course and speed of the vessel dictates?

That is the method which was proposed by myself in 1933 and installed in a number of ships. Messrs. Harland and Wolff in association with Messrs. Everett, Edgcumbe and Co.

have also produced the same system under the name *Harlandic*. Certain difficulties were experienced, some of which have been overcome; others, however, seem to be fundamental.

The electrical equipment of most vessels is D.C. with a variable load, and when this is used as the primary of a motor generator, it is not easy to control its speed. Then again, a reliable service is best secured by continuous running. This is rarely possible when in port, since the generating plant is then usually closed down.

Storage batteries cannot be employed to run a full equipment of synchronous clocks on normal vessels, since anything from fifty watts to half a kilowatt would be required. Rotary generators involve the use of brushes and commutators which interfere with the ship's wireless. This evil can be ameliorated by screening, but it is incipient.

We are thus thrown back upon circuits of electrical impulse dials for shipboard use, a method which has been universal since its inauguration in Liverpool early in this century.

It was always regretted that the Synchronome remontoire when used to drive a marine master clock, necessarily lost one of its most valuable features, viz. the compensatory action culminating in "battery warning," because it had no pendulum to assist the electro-magnet to replace the gravity lever. But the use of alternating current synchronous motors led me to devise the clock illustrated in fig. 120 in the last chapter, p. 243, in which a motor is used instead of a pendulum in such a manner that all the virtues of the Synchronome switch are retained, including "battery warning."

Thus, though it would appear that synchronous motor clocks cannot be had throughout the ship, that revolutionary method of time-keeping has contributed a valuable idea, evolved during the process of development, which assists marine time-keeping, viz. the use of a rotary motor to operate the switch.

One can of course revert to the motor generator method, on a very small scale and driven from a storage battery, in which form most of the difficulties named disappear. But it is obviously much more direct to use a D.C. motor, controlling its speed by the ideally simple method of a rheostat, or even by a centrifugal governor as in a gramophone. It must not be forgotten, however, that whereas A.C. synchronous motors have been developed as clocks with the two all-important features of slow speed (to reduce gearing) and ability to run continuously, D.C. motors on the other hand have not received the same concentrated attention, with the object of producing those essential characteristics. Nevertheless, it is well within the ability of the electrical engineering profession to give us what is wanted.

Accuracy of time-measurement on board a ship is wanted in one place only—the chart room. Nothing can be too good there as the first requirement for navigation, and the chronometer, checked by wireless time signals, provides it. Throughout the ship generally precision time-keeping is not wanted. The two characteristics needed in the clocks of an ocean liner for the management of the ship and the convenience of the passengers are their uniformity and facility for altering their rate every day. These will be most efficiently provided by circuits of electrical impulse dials, operated from master clocks and speed controlled.

GLOSSARY

Explanation of Simple Electrical Terms for Clockmakers

THE DEFINITIONS OF ELECTRICITY

Resistance.—The measure of the opposition offered to the flow of an unvarying direct current through a wire, dependent upon its composition, cross sectional area and length. Symbol R.

Ohm.—The unit of resistance. Symbol ω.

Ampere.—The unit of rate of flow of an electric current. Symbol I.

Coulomb.—The unit of quantity of an electric current; 1 ampere flowing for 1 second.

Watt.—An ampere multiplied by a volt. The unit of electrical power—the rate of doing work. Symbol W. 746 watts are equivalent to one horse-power.

Volt.—The unit of electrical potential or pressure, and a measure of Electro Motive Force. Symbol E.

Ohm's Law.—The relationship between electrical pressure, resistance and current, whereby when any two are known, the third can be ascertained. Symbol

$$I = \frac{E}{R}; \quad E = I \times R; \quad R = \frac{E}{I}.$$

Micro-Farad.—The practical unit of the capacity of two plates separated by an insulator for holding a charge of electricity. Symbol C.

Self-Induction.—The electrical equivalent of inertia, the energy required to overcome the opposition to the passage of a current by, say, a coil of wire wound round an iron core.

Inertia.—The mechanical equivalent of self-induction. A measure of the energy required to start a body moving from rest, or to change its speed of motion.

THE SOURCES OF ELECTRICITY

Leclanché Cell.—A primary voltaic cell employing carbon (positive) and zinc (negative) electrodes, and a solution of ammonium chloride (sal ammoniac) as the electrolyte; E.M.F. 1·4 volts. This type of cell is generally unsuitable for electric clocks on account of its high and fluctuating internal resistance and the frequent attention required to keep it in condition.

Dry Cell.—Usually of the Leclanché type, but having the sal ammoniac solution in the form of a paste, the cell being thus unspillable can be made up in convenient and portable form. E.M.F. 1·5 volts. Recommended for electric clocks on account of its comparatively constant output and the fact that it requires no maintenance.

Storage Cell.—A secondary cell depending upon a reversible electro-chemical action and reaction of its elements. The positive element or plate is usually of lead oxide, whilst the negative plate is of pure lead, the electrolyte being a solution of sulphuric acid. Some types of storage cells employ nickel and iron (Ni and Fe), in an alkaline solution.

Electrolyte.—The exciting liquid of a voltaic cell.

Battery.—A number of cells connected in series or parallel or series-parallel. (See the Distribution of Electricity.)

Direct Current.—A source of electricity of constant direction or polarity. Symbol D.C. Can be used for operating circuits of electrical impulse dials, or for charging storage cells.

Alternating Current.—A source of electricity whose direction or polarity is constantly changing from positive to negative and vice versa. Symbol A.C. Cannot be used, as produced, for operating circuits of electrical impulse dials nor for charging storage cells. (See "Rectifier.")

Frequency.—The rate at which an alternating current changes its direction. A periodicity of 50 cycles per second is now standardized throughout the supply undertakings of the British Isles, their co-ordination being known as the "Grid." The speed of the generators is controlled and the frequency is thereby kept at average Greenwich mean time, enabling Synchronous motors to serve as clocks. Symbol $\sim$.

Rectifier.—An instrument for converting A.C. to D.C.

Trickle Charger.—The permanent connection of the electricity supply to a storage battery through a resistance. Direct current is necessary, so a rectifier must be used with all A.C. circuits.

THE DISTRIBUTION OF ELECTRICITY

Switchboard.—A group of switches, fuses, and measuring instruments, etc., used for controlling an electric power supply such as the charge and discharge of storage batteries.

Series Circuit.—The joining up, or the arrangement of a number of coils or instruments end to end. The whole of a current (applied at either end of the group) has to pass through each instrument successively.

Parallel Circuit.—A number of coils or resistances joined up so that the respective ends of each are all connected to the same terminal of the battery. A current applied to such group will divide and a portion of it traverse each coil separately.

Series Parallel Circuits.—Two or more series circuits joined together in parallel.

Back E.M.F.—A pressure generated in a coil of wire as a result of its own induction. It is of opposite sign to the main current. The returning or giving up, on stopping the current, of that energy required initially to start it flowing against the opposition of self-induction.

Non-inductive Shunt.—A bye-pass resistance of negligible self-induction connected in parallel with, say, a coil or magnet to short circuit the back E.M.F. and prevent its dissipation in the form of a harmful spark at the contacts.

Short Circuit.—A path of low electrical resistance.

Permanent Magnet.—A piece of steel usually of horse-shoe shape which retains its magnetism.

Electro-Magnet.—A piece of soft iron wound with insulated wire in the form of coils.

Core.—The centre portion of an electro-magnet over which the wire is wound; usually of soft iron.

YOKE.—The framework, usually of soft iron, of an electro-magnet which together with the core forms a complete "magnetic circuit" with the armature.

ARMATURE.—A piece, usually of soft iron, in which mechanical energy can be produced by a magnetic force.

COMMUTATOR.—A device for conducting current to a brush or wire successively from other wires or sources of current. It consists of a number of sections or segments insulated one from the other and built up usually in the form of a disc or drum.

CONDENSER.—A pair of metal plates or electrodes (separated by an insulator) possessing capacity and thereby acting as a reservoir which may be used instead of, or in combination with, a non-inductive shunt to absorb the "spark at break."

Explanation of Simple Horological Terms for Electricians

AIR RESISTANCE to the swing of a pendulum is such that it requires nearly five times as much energy to maintain it at a normal arc in atmosphere as it would in a vacuum, when a seconds pendulum would then go 9½ secs. per day faster.

ARC.—The portion of a circular path in which a pendulum swings, usually limited to a few degrees of the complete circle.

BAROMETRIC ERROR.—The effect of changes in air pressure on the rate of a pendulum.

BEAT PLATE.—The scale on which to observe the arc of a pendulum. If the extreme end of a seconds pendulum is 45″ from its suspension, the degrees engraved on the beat-plate will be 0·787″ or 20 mm. apart.

One minute of arc will be 0·013″ or 0·33 mm.
One second of arc will be 0·0002″ or 0·005 mm.

CHRONOGRAPH.—An instrument which measures and records precisely short intervals of time.

MICRO-CHRONOGRAPH, capable of measuring short intervals such as thousandth parts of a second.

Circle.—Is divided into 360 degrees, each degree is divided into 60 min., and each minute into 60 sec.

Circular Error.—The longer time which a pendulum will take to cover a larger than a smaller arc.

Elinvar.—An alloy whose elasticity is unaffected by temperature.

Escapement.—The mechanical means by which a pendulum releases and receives its maintenance, *i.e.* the power from a train of wheelwork which drives it.

Escapement Error.—Systematic disturbances of the pendulum by 'scape-wheel teeth or gravity arms which are subject to frictional variations.

Free Pendulum.—A pendulum which has nothing to do but swing.

Gravity.—The attraction of the earth, which causes the pendulum to swing when once it has been set in motion.

Interference.—A term which is used to indicate anything which interferes with the freedom of the pendulum, excepting only gravity and air resistance.

Invar.—An alloy of nickel and steel, having a very small temperature co-efficient of expansion.

Mean Solar Time.—The practical standard based on the average length of a day, and calculated from Sidereal time.

Sidereal Time.—The absolute standard which is based on the exact time of rotation of the earth, now corrected for Nutation.

Pendulum.—The length of a pendulum between point of suspension and centre of oscillation (almost equivalent to the centre of gravity of the bob), is:—

Beating seconds	39·14 inches,
Beating half-seconds	9·78 inches.

Remontoire.—Automatic re-winding at comparatively short intervals.

Temperature Error.—The effect of changes of temperature upon the length of a pendulum.

Transit Instrument.—A telescope mounted in bearings for turning North and South only, for observations of the exact time of passage of the "clock" stars.

Zero.—The position in which a pendulum comes to rest under the influence of gravity: the middle of its swing.

INDEX